COMPUR Monitors

Operators Manual

Statox 560

Content

1 Safety Advice 4
2 Product description 5
3 Installation and Connection 6
3.1 Maximum distance to the power supply 6
3.2 Mounting 7
3.3 Statox 560 Cable Tail Version Connection 9
3.4 Statox 560 connecting the eXLink-Plug 10
3.5 Connecting Statox 560 to a Statox 502 Control Module 12
3.6 Connecting the Remote Self-test 13
3.7 Connection to the Open-Drain switching outputs 14
3.8 Stand-alone operation 14
4 Product characteristics 15
4.1 Housing 15
4.2 Keys 15
4.3 LEDs 16
4.4 Display 16
4.5 Sensor module 17
5 Getting started and menu navigation 17
5.1 Start - Up, Connecting the Sensor Module 18
5.2 Menus 21
5.2.1 General 21
5.2.2 Accessing the Service Menu 22
5.3 Menu overview 22
5.3.1 Prooftest 24
5.3.2 Self-test 25
5.3.2.1 Submneu Self-Test - Info 26
5.3.2.2 Submenu Self-test - Manual Start 27
5.3.2.3 Submenu Self-test – Start time 28
5.3.2.4 Submenu Self-test - Monitoring 29
5.3.3 Calibration 30
5.3.4 Change Sensor – Sensor Module / Sensor / Generator Cell Replacement 33
5.3.4.1 Sensor module replacement 33
5.3.4.2 Sensor and Generator Cell replacement: 34
5.3.5 Errors Info 37
5.3.6 Alarm History 37
5.3.7 Sensor Info 38
5.3.8 Temperature 39
5.3.9 Firmware 39
5.3.10 Alarm Relays 39
5.3.11 Real Time Clock 41
5.3.12 Service Output 42
5.3.13 Function Test 43
5.3.14 Maintenance Request 45
6 System Status and Error Messages 46
6.1 System Status 46
6.2 Error messages 47
7 Maintenance and Cleaning 49

7.1 Routine treatment 49
7.2 Replacing the pump 49
8 Accessories and spare parts 50
9 Functional Safety 51
9.1 Safety Functions 51
9.2 Diagnostic Time and Measuring Cycle 51
9.3 Installation and Parameter Settings 52
9.4 Schedule Maintenance 52
9.5 Repair and Spare Parts 52
9.6 Failure Rates and Safe Failure Fraction 53
9.7 Average Probability of Failure on Demand 53
9.8 Classification of the Safety Integrity Level (SIL) 54
9.9 Livetime 54
10 General Technical Data 55
11 Sensor-specific data 56
11.1 Statox 560 Sensor Module $COCl_2$ 0.5 ppm 562920 56
11.2 Statox 560 Sensor Module $COCl_2$ 1 ppm 562922 57
11.3 Statox 560 Sensor Module $COCl_2$ 50 ppm 562924 58
11.4 Statox 560 Sensor Module HCN 20 ppm 562930 59
11.5 Statox 560 Sensor Module HCN 50 ppm 562932 60
11.6 Statox 560 Sensor Module HCN 100 ppm 562934 61
11.7 Statox 560 Sensor Module Cl_2 5 ppm 562910 62
11.8 Statox 560 Sensor Module Cl_2 10 ppm 562912 63
11.9 Statox 560 Sensor Module H_2S 100 ppm 562928 64
11.10 Statox 560 Sensor Module CO 300 ppm 562916 65
11.11 Statox 560 Sensor Module HCl 100 ppm 562936 66
11.12 Statox 560 Sensor Module NH_3 150 ppm 562938 67
12 Declaration of conformity 68

1 Safety Advice

- Read and observe this manual carefully. Store it in safe place.
- The Statox 560 is only allowed to operate under the given ambient conditions (see Technical Data, chapter 10).
- In particular the regulations with regards to the protection regulations for instance DIN EN 60079-14 must be observed.
- Installation must be performed by trained and authorized personnel. Only original Compur Monitors parts may be used.
- The Statox 560 must not be connected to mains! The supply voltage is 24 (16-30) VDC.
- All outputs of the Statox 560 may only be operated with 30 VDC.
- Damaged or modified sensor heads must not be used.
- The Ex d housing must not be opened!
- When operated in hazardous atmosphere, the sensor head must be connected to the exLink counterpart or to a certified connection box.

Disregarding these recommendations may compromise the protection and result in a danger for personnel and material.

These signs mark important information:

DANGER

Indicates direct danger for man and material.

HINT

Important Information.

2 Product description

The Statox 560 sensor head is explosion proof group II category 2. It is designed to comply with the requirements for installation in zone 1 and zone 2. The Statox 560 sensor head can be operated as a stand - alone unit, or as a 4-20 mA transmitter. It is a detector for toxic gases and can be operated outdoors or indoors. Extensive self – diagnosis algorithms and the relevant hardware comply with the requirements for SIL 2 applications.

The daily self-test with internally generated test gas guaranties maximum safety and availability.

The Statox 560 sensor head can be operated by magnetic pin through the window of the flame proof housing. The actual concentration is shown on the display and will be transmitted as 4 – 20 mA signal. The system status (alarms, system failure, and maintenance request) is shown on the LEDs and signalized via the current output. External alarm devices can be connected to 4 open drain outputs via relays.

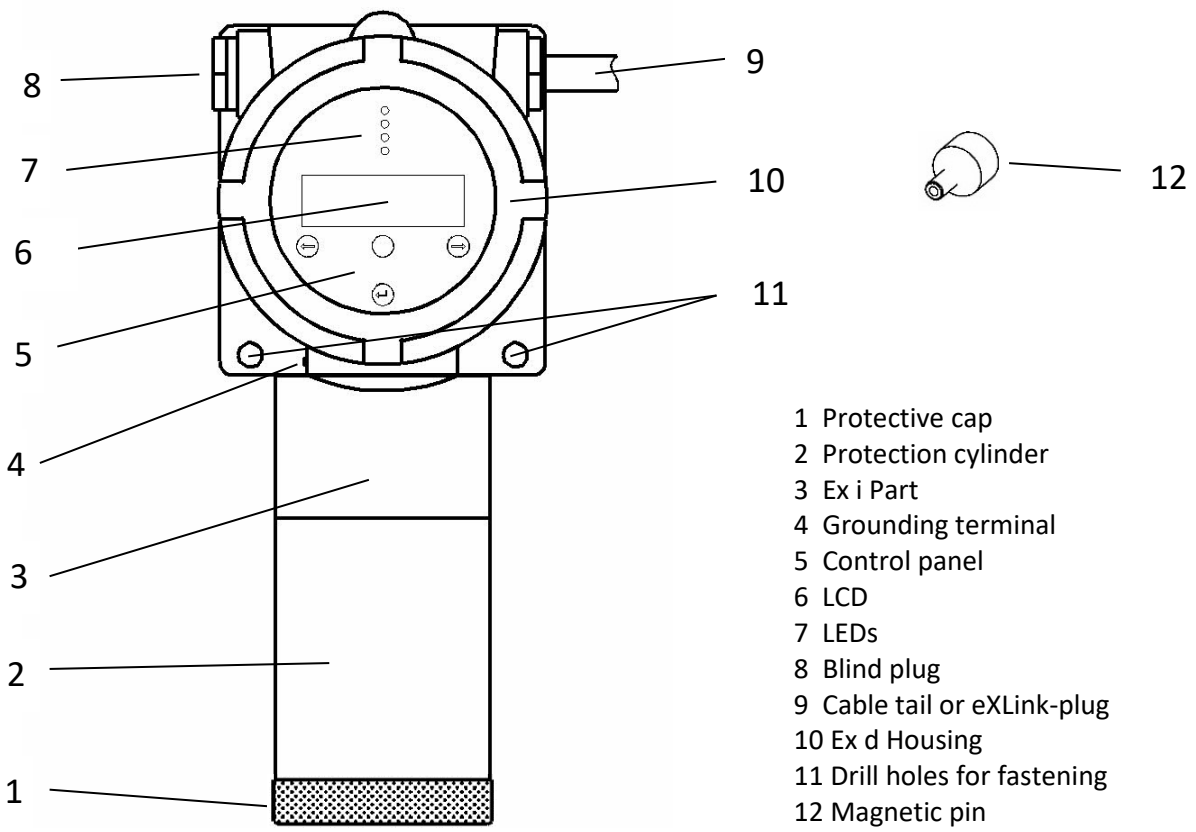

Picture 1: Sensor head Statox 560

3 Installation and Connection

Compur Monitors recommends to use fine mashed cable ≥ 0.75 mm² for instance type Oelflex 415 CP.

3.1 Maximum distance to the power supply

The maximum cable length depends on the gas to be measured (different power requirements of the different gas generators) and the cable lead diameter. These requirements are based on 24 VDC power supply and optimum contact resistance.

Diameter or AWG-No.	Maximum distance to power supply [m]	
	$COCl_2$	HCN, H_2S, Cl_2, CO
24-AWG	96	314
0,25 mm²	107	351
0,5 mm²	214	700
20-AWG	242	793
19-AWG	306	1000
0,75 mm²	321	1049
18-AWG	385	1261
1 mm²	427	1399
16-AWG	613	2006
1,5 mm²	627	2051
14-AWG	975	3190
2,5 mm²	1044	3418

Table 1: Maximum distance to power supply depending on the gas to be measured at 20 °C

! Observe these maximum cable length for error-free operation!

3.2 Mounting

Install the Statox 560 close to a potential leakage or between a potential leakage and a workplace. In particular observe the following parameters:

- Air stream (wind, ventilation, thermal effects)
- Properties of the target gas (specific weight)
- Protection from direct sunlight, splash water, dust, dirt etc.
- Easy accessibility for maintenance and programming

Leaving the stainless steel protective cylinder and the protective cap on the instrument protects it from pollution. Install the Statox 560 sensor head in upright position to the wall. Use two M8 screws and suitable washers. Maximum 15 ° deviation from the upright position is acceptable. See below the dimensions inclusive the space needed for easy access in brackets.

Compur Monitors offers an Ex e rated terminal box (art. # 562988) made of varnished cast aluminum.
It has

- 10 numbered contacts for wiring with Ø 2.5 mm²
- an outside grounding terminal for wire Ø 4 mm²
- EMC – proof cable glands for cables 6-13 mm
- Outer dimensions 122 x 120 x 80
- wall mounting with 4 screws M6

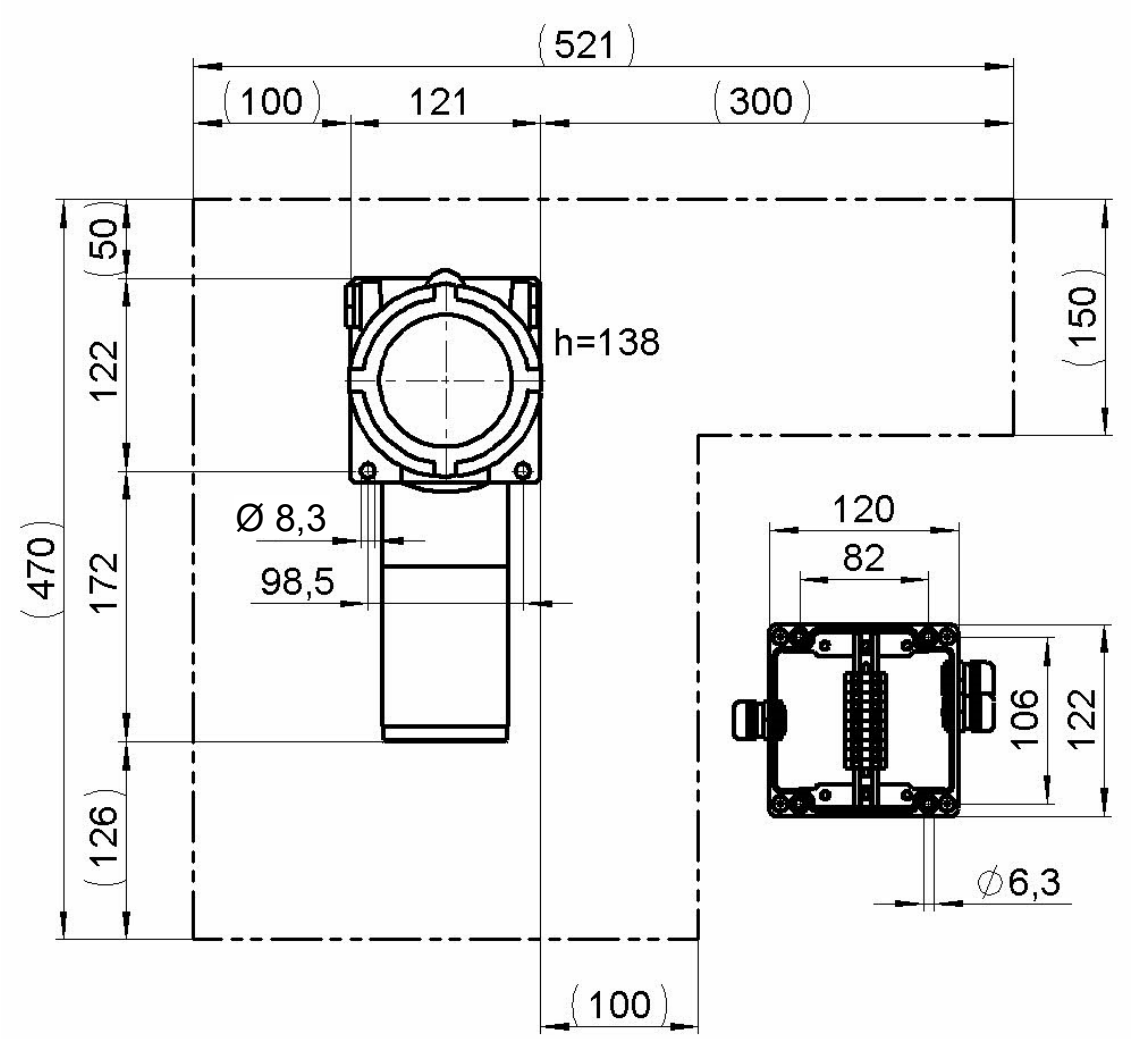

Picture 2: Statox 560 dimensions in mm and the space needed for safe and easy operation.

Outer dimensions and drill plan of the junction box, article number 562988.

Do not open the blue flame - proof housing!

3.3 Statox 560 Cable Tail Version Connection

The cable tail must be connected to a suitable EMC junction box made of metal. When installed in a hazardous area this must be certified Ex e and have 10 terminals and EMC resistant cable glands.

Statox 560 must be operated with 24 (16-30) VDC. Connecting it to higher voltages or short circuiting the outputs may destroy it.

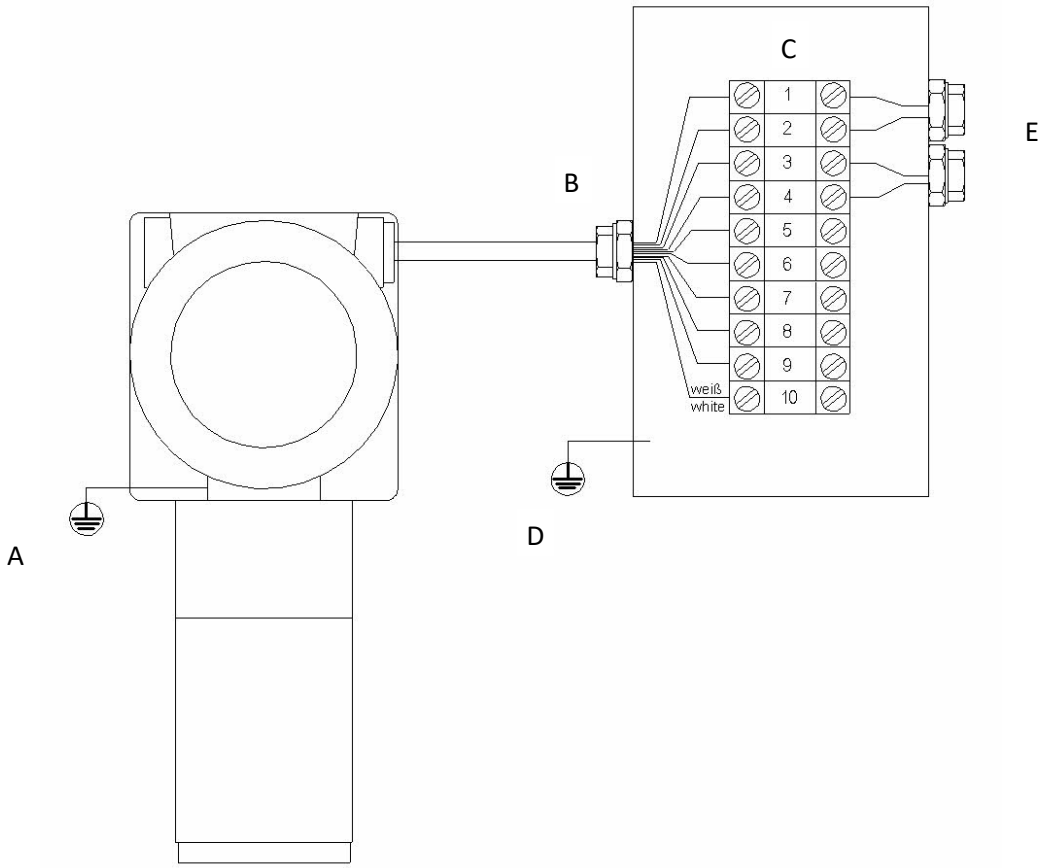

Picture 3: Statox 560 cable tail connection

Caution:

A. Connect the grounding contact to the ground of the building, using a cable diameter ≥ 6 mm². Check your installation for proper grounding.

B. Remove the protective tube from the cable shield and insert the cable through the EMC – proof cable gland. Remark: the cable shield is not connected to the sensor head housing!

C. Connect the cores in the sequence of their numbers to the terminals, the white core to terminal 10. All cores must be connected, even if you do not use them all.

D. Connect the grounding contact of the junction box to the ground of the building. Use a cable with ≥ 4 mm² diameter. Check for proper grounding.

E. The number of outgoing cable glands depends on your application. In order to avoid ground loops, ground the cable shield only on one side.

- Do not try to remove the cable tail from the sensor head. It will destroy it!
- Never leave lose cable ends in the terminal box!
- Proper grounding is essential for error– free operation!

Wire	Function	Description
1	+24 VDC	+ 24 V power supply (16-30 VDC)
2	0 VDC	Power supply ground
3	I_OUT+	0-22 mA Current output
4	I_OUT-	Current output ground
5	Remote Self-test	Remote self–test trigger
6	GND_R	Common ground for all relays
7	Maintenance Request	Relay output maintenance request (open drain)
8	System Failure	Relay output System failure (open drain)
9	A2	Relay output Alarm 2 (open drain)
wt	A1	Relay output Alarm 1 (open drain)

Table 2: Connecting the cable tail

3.4 Statox 560 connecting the eXLink-Plug

The Statox 560 eXLink-Version (7 pole) has a plug installed in the housing. The counterpart must be installed by the user and can be connected to a junction box if necessary. The eXLink can be connected and disconnected in hazardous areas without hot work permit.

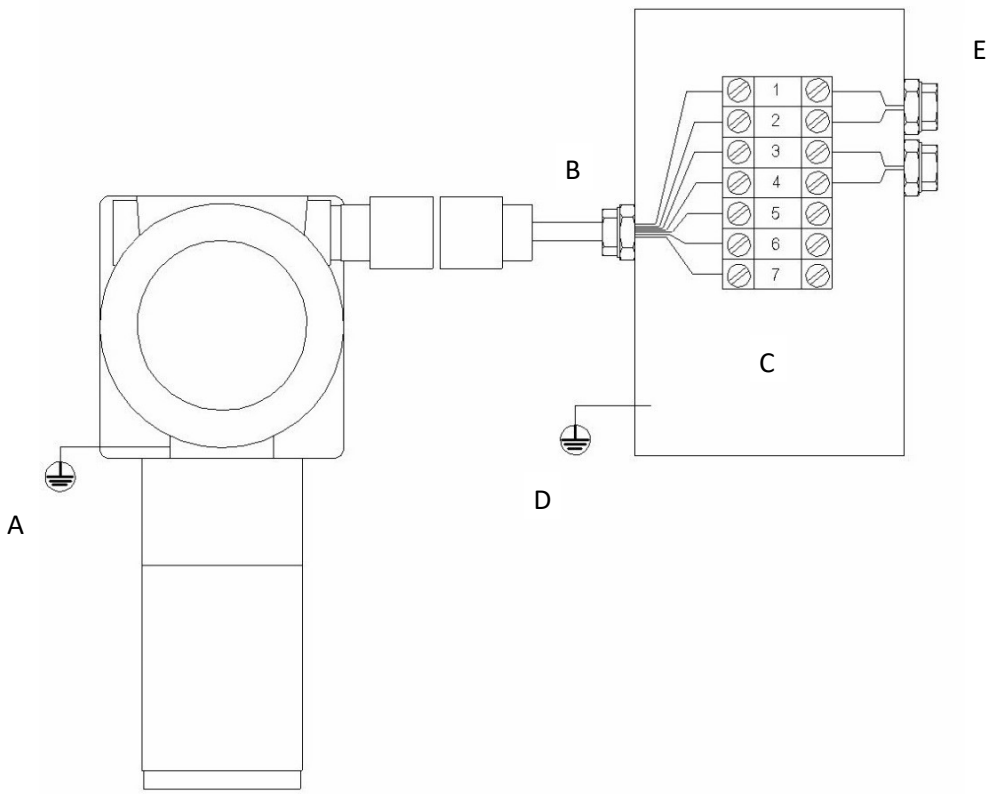

Picture 4: Connection of the eXLink

Please observe points A to E in chapter 3.3, they apply to this application method, too. It is not mandatory to connect all contacts on the field side.

Do not connect the cable shield to the coupling!

Use only coupling Compur # 805594. Observe its installation instructions.

- Take care for correct wiring! Wrong pin assignment may damage the Statox 560!
- Do not try to dismount the eXLink from the sensor head. This is a potted joint. Loosening it will destroy Ex d rating of the housing!

Pin assignment:

Contact	Function	Description
1	+24 VDC	+ 24 V Power supply (16-30 VDC)
2	0 VDC	Power supply ground
3	I_OUT+	0-22 mA Current output
4	I_OUT-	Current output ground
5	Remote Self-test	Remote self-test trigger
6	GND_R	Common ground for relays
7	Maintenance Request	Relay maintenance request (open drain)

Table 3: Pin assignment Statox 560 eXLink-plug

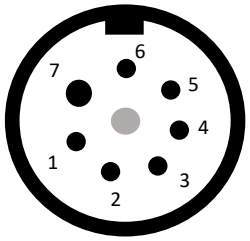

Picture 5: Pin assignment Statox 560 eXLink-plug

3.5 Connecting Statox 560 to a Statox 502 Control Module

Here is the procedure how to connect a Statox 560 sensor head to a Statox 502 Control Module (Article number 557000):

- First select the appropriate program of the Statox 502 Control Module. Observe the installation instructions and the program listing of the 502 Control Module!
- Make sure not to exceed the maximum cable length (see chapter 3.1).
- Use two separate wires to connect the ground on pin 2 and the ground on pin 4 to the Statox 502 Control Module.
- A Statox 502 Control Module can be programmed to operate as a common alarm module.
- Connect the cable shield to one side only to avoid ground loops!

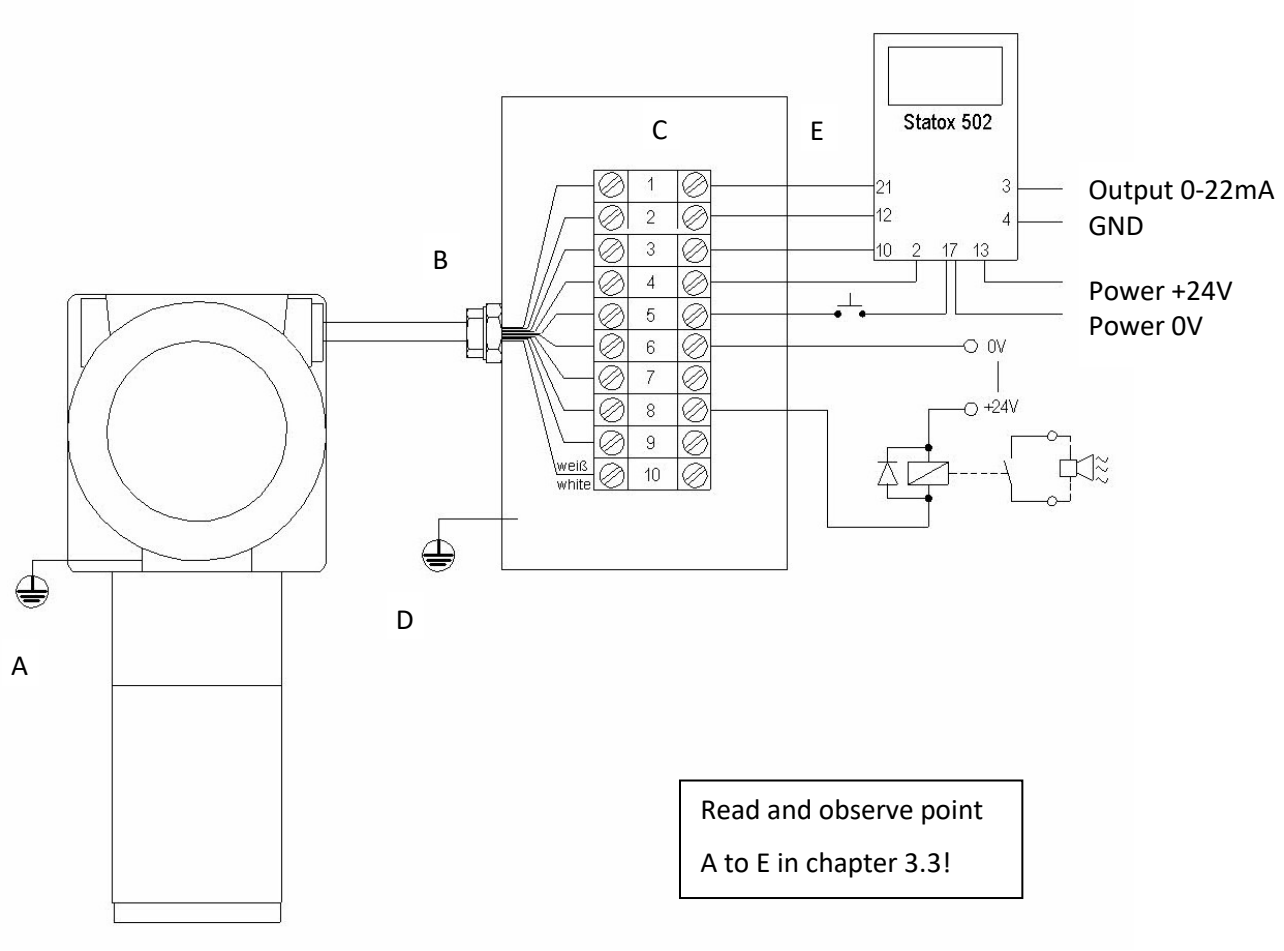

Picture 6: Connect the Statox 560 to a Statox 502 Control Module

Wrong pin assignment may destroy the Statox 560 or the Statox 502!

3.6 Connecting the Remote Self-test

Pin No. 5 can be used as remote self-test trigger. It has the same function as the automatic or manually initiated self-test started with the magnetic pin. Therefore the wire number 5 must be connected to ground via a non - latching pushbutton (see Picture 6). By pressing the button, the signal will be connected to ground and the self-test is starting.

3.7 Connection to the Open-Drain switching outputs

The four switching outputs are Open-Drain-signals. The output can be connected to external relays operated with max. 30 V DC with a max. current of 2.5 A. Connecting the alarm relays is optional.
Pin 6 - GND_R is the common ground for all alarm relays.

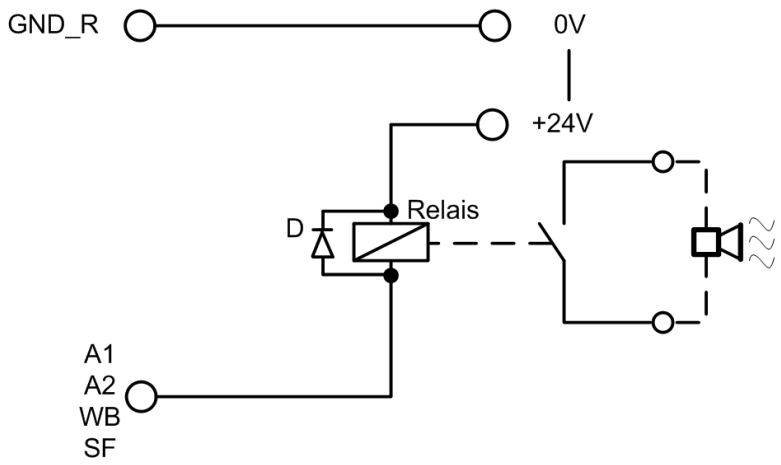

Picture 7: How to connect an alarm relay

!	It is mandatory to connect a freewheel diode to the relay (see Picture 7 - D).

3.8 Stand-alone operation

If you want to run the Statox 560 in stand-alone mode (only switching outputs are connected) you have to short pin number 3 and 4 (see Picture 6) directly in the junction box. This way an ammeter is simulated and an error code 2 massage is avoided.

4 Product characteristics

4.1 Housing

The upper part of Statox 560 is an Ex d certified housing with window. This part is sealed and may not be opened by the user. A repair is only possible at Compur Monitors.

The Ex d housing must not be opened by other than Compur Monitors personnel or trained and certified personnel of Compur Monitors representatives!
No warranty on sensor heads which have been opened by unauthorized personnel!

The lower part of the Statox 560 (stainless steel) is intrinsically safe. It can be opened without hot-work permit and without disconnecting the sensor head power supply. In order to change the sensor module, unscrew the protection cylinder counter clockwise (see Chapter 5.3.4).

4.2 Keys

Statox 560 can be operated through the window with a magnetic pin. The magnetic pin activates hall sensors inside the sensor head. Just hold the slim part of the pin next to the key. The individual keys have the following functions:

Keys		Function
↵	Enter	Confirm entries.
R	Reset	Delete false settings. Step back to the recent menu. Reset alarms.
←	Left	Navigates left in the menu, reduces a set value, and accesses the service menu.
→	Right	Navigates right in the menu, increases a set value, and accesses the info - menu.

4.3 LEDs

4 LEDs signalize the actual system status of Statox 560:

Name	Color	Function
ON	Green	Power supply: „ON“ : Power is on. „Off“:Power is too low or off.
A1	Yellow	Alarm relay A1 is activated, alarm threshold A1 has been exceeded.
A2	Yellow	Alarm relay A2 is activated, alarm threshold A2 has been exceeded.
S	Red	System status: „OFF“: System operating. „ON“: System failure or system inactive. „Flashing steadily“: Service mode. „Periodic double - flash“: Maintenance request.

4.4 Display

The display is lighted. It shows the target gas, the concentration and the unit. If the concentration is out of range, the full-scale value is flashing.

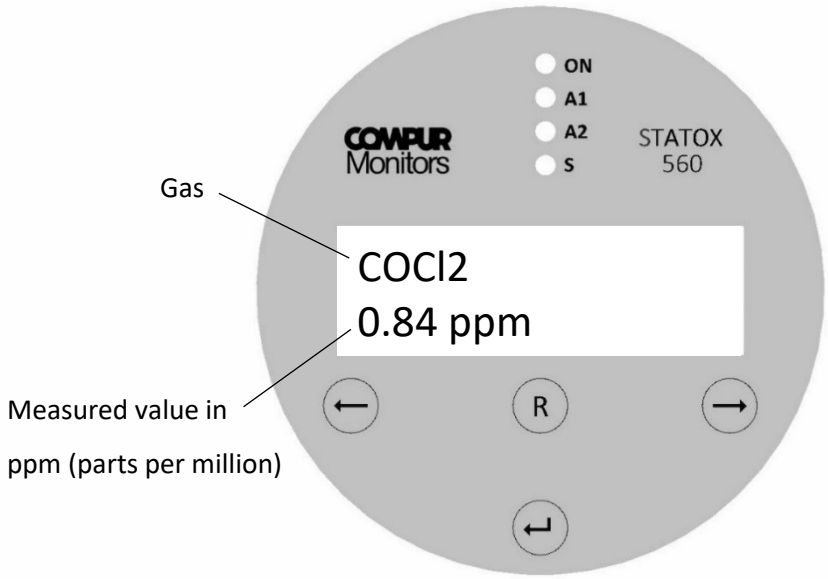

Picture 8: Statox 560 Front view

4.5 Sensor module

The plug-and-play sensor module reduces the maintenance labor in the field to a minimum. After removing the protection cylinder, you can unplug the sensor module. It can be removed without deactivating the sensor head (see Chapter 5.3.4). After inserting a new sensor module, it communicates all parameters inclusive calibration data to the sensor head.

The sensor module includes the specific sensor and a generator cell, producing the appropriate gas for the self-test. To change the individual components you have to open the module.

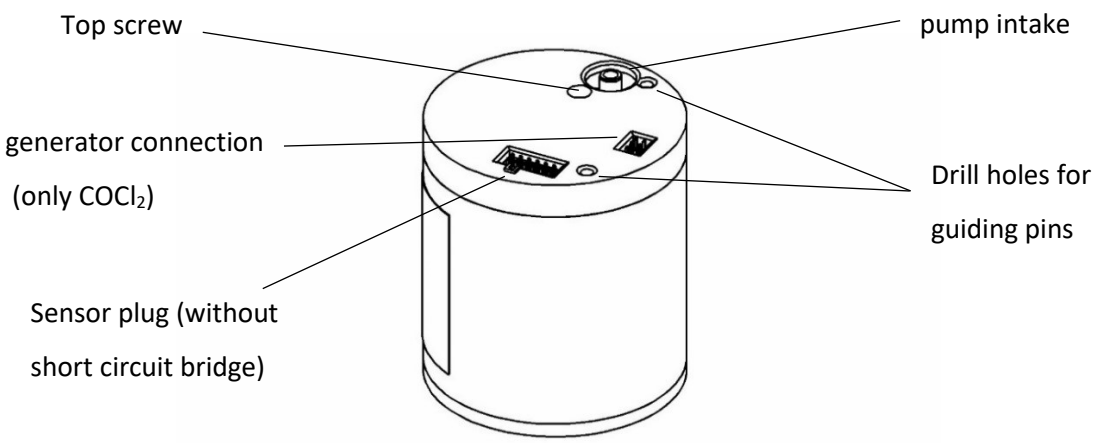

Picture 9: Sensor module

The sensor module parts are sensitive to electrostatic discharge. Observe the handling precautions for ESD sensitive material. Electrostatic discharge may destroy the sensor memory!

5 Getting started and menu navigation

Before you connect the Statox 560 to power, check for correct wiring to avoid any damage of the system!

After connecting to power, the current firmware number, date and time will be displayed for min. 5 sec each. In case there is no sensor module connected, the display will alternatingly show **„No Sensor“**. You may now connect the sensor module. Schematics of the start-up see Picture 11.

5.1 Start - Up, Connecting the Sensor Module

1. Remove the yellow protective cap and unscrew counterclockwise the protection stainless steel cylinder. Keep the protective cap! It might be useful to protect the sensor head from pollution when leaving it without sensor module.
2. Take the Sensor Module out of the package. If there is a short circuit bridge (applicable for 2 electrode sensors) remove it. Check for eventual damage!
3. Insert the guiding pins into the relevant drill holes to connect the sensor module by pushing it carefully upward (see Picture 10).

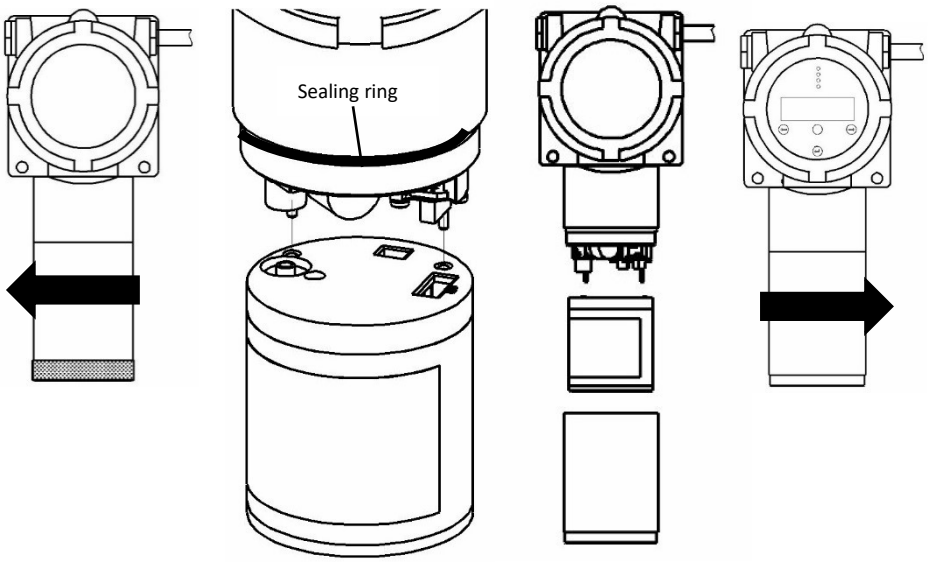

Picture 10: Connecting the sensor module

4. Now fingertight fasten the protective cylinder. The sealing ring must be clean!
5. The sensor head will now detect the sensor module. The display shows **„Loading Parameter“**, while all operation – and calibration parameters are loaded. In case these cannot be read, see chapter 6.2.
6. The Statox 560 will give you the warning **„Change of sensor type!“**, in case it has been operated with a different sensor module before. If you really want to change the gas or range, confirm with ⊖. This is intended to prevent the user from connecting a wrong sensor module. If you don't want to work with the plugged module you can easily remove the module by pulling it down. Now you can use the desired sensor module.
7. During the warm-up the display shows alternatingly the menus gas/measuring range/parameter version and serial number/best before date (week/year). This procedure can take some minutes, especially with 3-electrode-sensors.

8. After the warm-up, the Statox 560 goes into the measuring mode. Allow 60 minutes for stabilization and acclimatization, then proceed a zero adjustment (see chapter 5.3.3) to improve the accuracy.

The following settings must be done after the start-up:

- Set the real time clock (see chapter 5.3.11)
- Set the self-test parameters (see chapter 0)
- Set the alarm relays (see Chapter 5.3.10)

Change the sensor module only in the menu **Change Sensor**, see Chapter 5.3.4! In order to avoid a data loss in the sensor memory.

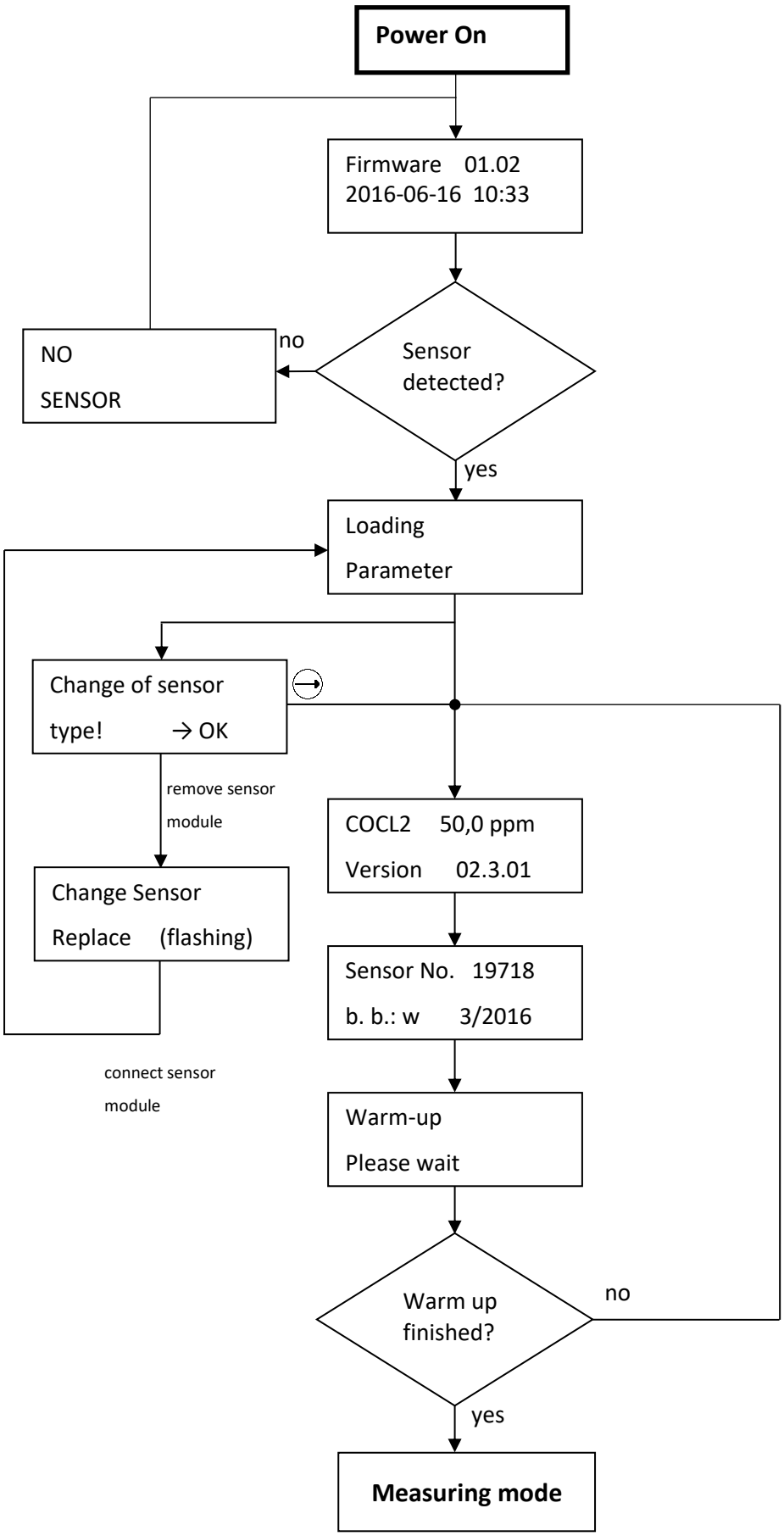

Picture 11: Schematics warm-up

5.2 Menus

5.2.1 General

The Statox 560 is operated via 4 buttons at the sight glass. These are activated by a magnetic pin, by holding it shortly onto the glass over the relevant button. The Statox 560 menu hast two levels:

- **Info Menu:** This menu is accessible without password with the button. Here you can access system information, initiate a prooftest or replace the sensor module. While navigating in this menu, the sensor head remains in the measuring mode. All measuring and alarm functions remain active. In this menu no parameters can be changed or set!
- **Service Menu:** The service menu is accessible with the button. After entering the password (see chapter 5.2.2) the senor head is in the service mode. The LED **„S“** is flashing. Depending on your setting, the output signal is set to 2 or 4 mA. The alarm relays are inhibited. Now you can set parameters or settings.

!

- General Timeout: If no button is pushed during 5 min. the senor head returns to the measuring mode. Exceptions see sub – menu descriptions.
- When the symbol ✱ appears on right upper side of the display, internal diagnostics are made. During this time, the buttons are not active and there is no display update!

5.2.2 Accessing the Service Menu

Calibration and changes of the parameters can only be done in the service menu.

The password is: **1994** (not changeable)

Procedure:

1. Push ⊖ now the password is requested.
2. The active digit is flashing:

Service CODE=0000

   Lower with ⊖, increase with ⊕. Use ↵ to move on the next digit, use Ⓡ to get back to the recent digit.

3. Enter the password and confirm with ↵.
4. The correct password brings you into the service menu. Any false entry stays for correction.

! During the service menu no measured values are transmitted, no alarms are generated, existing alarms are inhibited.

5.3 Menu overview

These schematics give an overview of the main menu of the Statox 560 and a short description. Details of the sub – menus start from chapter 5.3.1.

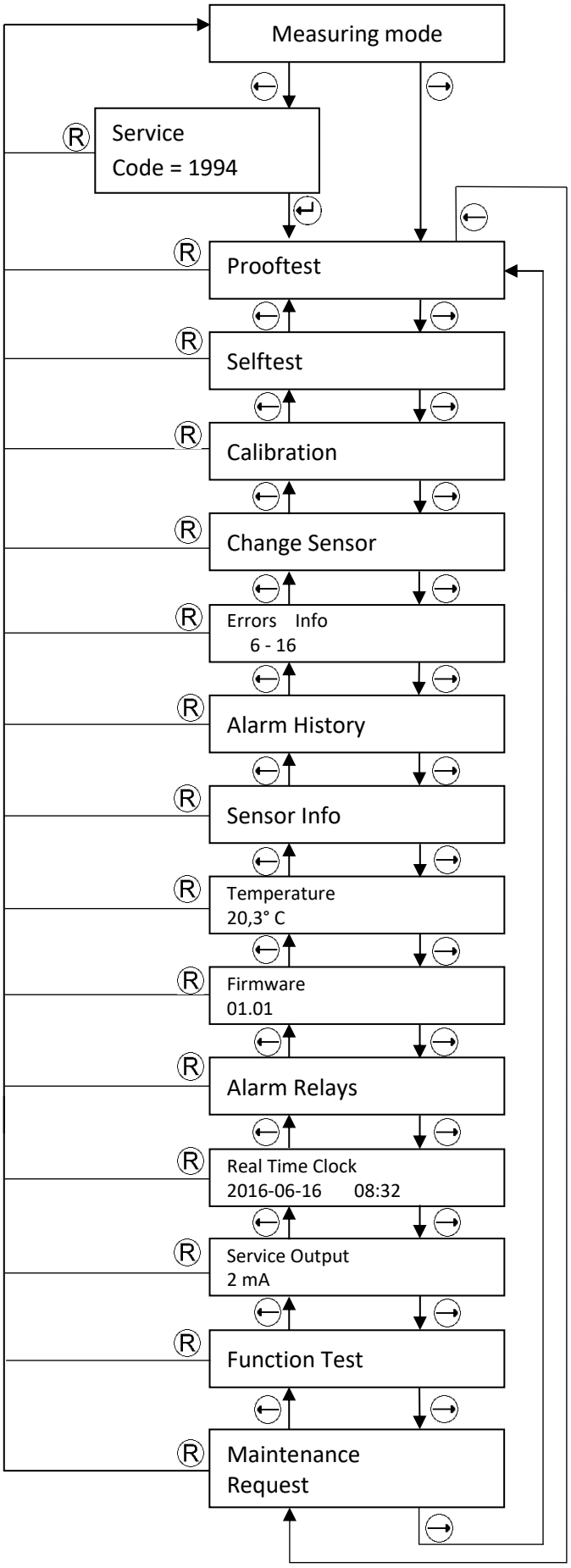

Short description:

Prooftest start

Self - test start, set self - test schedule

Sensor calibration

Sensor module replacement

Error Code info

Alarm history

Sub menu sensor info

Display the current temperature

Display the current Firmware

Sub menu alarm settings

Time and date settings

Setting of the analog output during service

Test of the alarms, display and mA-output

Maintenance request settings

Picture 12: Main menu

5.3.1 Prooftest

A prooftest checks the sensor head response to gas without triggering an alarm. It can be activated without entering the password - protected service menu. During the prooftest the sensor head is in the service mode, i. e. the output signal is on the preset value and the alarms are inhibited.

The display shows the actual concentration.

To perform a prooftest you need calibration adapter art. # 562984, an inert gas tube (e.g. art.# 556710) and test gas with a concentration within the measuring range, ideally close to the alarm threshold.

1. Check that the O-Ring sits correctly in the calibration adapter. Push the calibration adapter onto the protection cylinder by slightly turning it. The side marked with “Front” points toward the user.
2. Connect the gas tube at the bottom side to it (compare Picture in Chapter 5.3.3).
3. Enter the menu **„Prooftest“** and start the prooftest by pushing ↵. Now open gas valve. Flow: ca. 30 l/h (500 ml/min). The display shows the actual measured value. Depending the age of the sensor and the gas to be measured, it may take a few minutes until the measured value has stabilized.
4. Switch the gas off and remove the calibration adapter.
5. Wait for the measured value to return to zero before returning to main menu by pushing Ⓡ. Do not rush – you might otherwise create a false alarm!

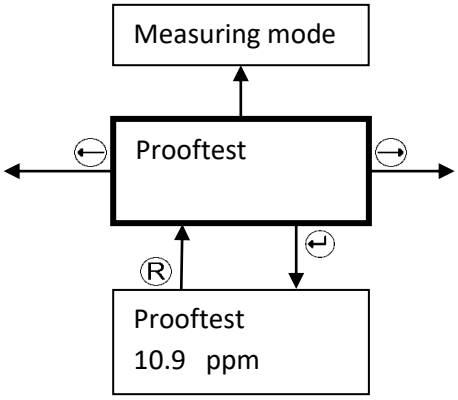

Picture 13: Schematics Prooftest

!

- The timeout during the prooftest is increased to 30min!
- After finishing the prooftest the senor head returns to the recent status. If you start the prooftest out of the service – menu, the sensor head will remain in the service mode.

5.3.2 Self-test

The Statox 560 performs an automatic self – test with gas every 24 h. The sensor module includes a gas generator cell, generating a small concentration of the gas to be measured. This give you a reliable information, if the sensor head is working properly. Please note the following:

1. The self-test schedule is adjustable (see chapter 5.3.2.3). It always starts at the same time except:
   a) When temperature is out of specifications, the test is cancelled.
   b) If there is gas in the atmosphere, the test is skipped to maintain the measuring function. You will find the respective limit in chapter 11.
   c) If the service or info menu is active, the test will be postponed until service is completed.
   d) In case of system failure, the test is canceled.
2. In case the self-test has been skipped three time in a row for reason a) or b), you will get a maintenance request alarm.
3. During the self-test the Statox 560 is in the service mode.
4. After the self-test the test result is displayed and will be saved. The recent 5 tests can be shown on the display (see Chapter 0).
5. A non – passed self-test generates a maintenance request alarm.
6. A passed self – test will automatically reset a self-test induced maintenance alarm (self-healing).
7. The self-test can be triggered manually (see chapter 0), either directly at the sensor head or by a remote self-test button (see chapter 3.6).). A manually triggered self-test is always additional to the scheduled test, but its functionality is the same.
8. The remote self-test cannot be triggered if the info meu or the service menu is active or the symbol ∗ is on the display (internal diagnosis is running).

Test procedure:

A small amount of test gas is generated and pumped in front of the sensor. The signal generated by this gas must reach a minimum level within a maximum time. After purging the sensor with ambient air, the signal must return to zero within a certain time limit. The sensor head returns to the measuring mode.
More details are included in the sesnsor-specific data in chapter 11.

The Self – Test Menu:

The self – test menu includes 4 sub menus.

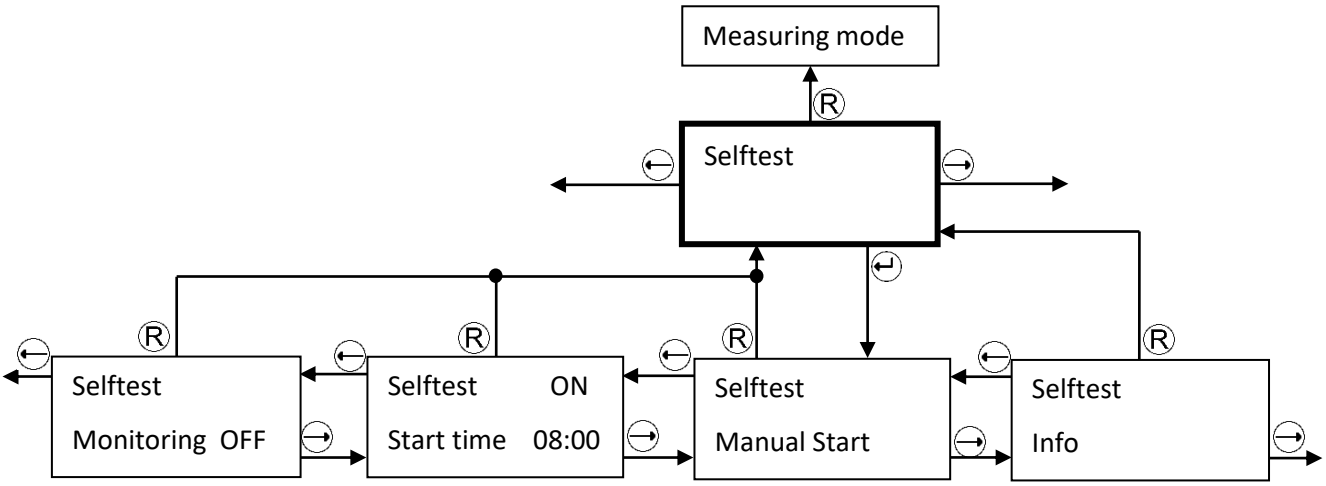

Picture 14: Submenu of the self-test menu

5.3.2.1 Submneu Self-Test - Info

In this menu you can read the time and result of the most recent 5 tests. The listing is arranged chronologically with ST1 as the most recent self-test. If there were no tests before, the display shows **„no data“**.

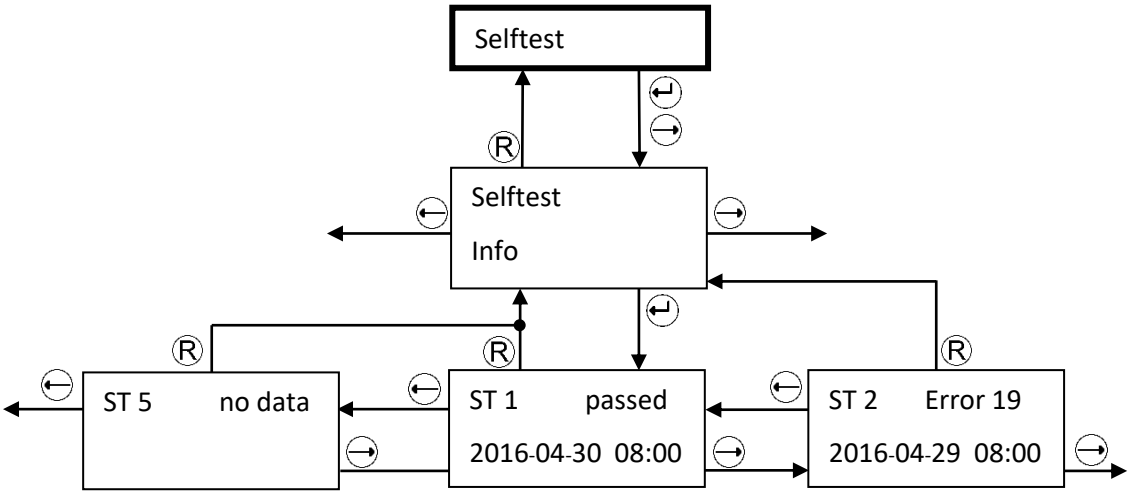

Picture 15: Submenu "Selftest - Info"

5.3.2.2 Submenu Self-test - Manual Start

In this menu you can manually trigger a self –test. Just confirm with ↵ to start. Temperature and sensor signal will be checked.

- If temperature is out of specifications, the test will not start. The display shows **„Temp. out of selftest range“** for 5 seconds and then the sensor head returns into the measuring mode.
- If the sensor signal exceeds a fixed limit, the test will not start. The display shows **„Zero out of selftest range“** for 5 seconds and the sensor head returns into the measuring mode. Gas detection has always priority before testing. If you are sure, there is no gas present, adjust zero (see chapter 5.3.3).
- During the self-test the sensor head is in the service mode. When it has passed the test the display shows „**Selftest passed**“ for 5 seconds and the senor head goes back into the measuring mode. If it does not pass the relevant error code (see chapter 6.2) is displayed for 5 seconds before the sensor head goes back into the measuring mode.

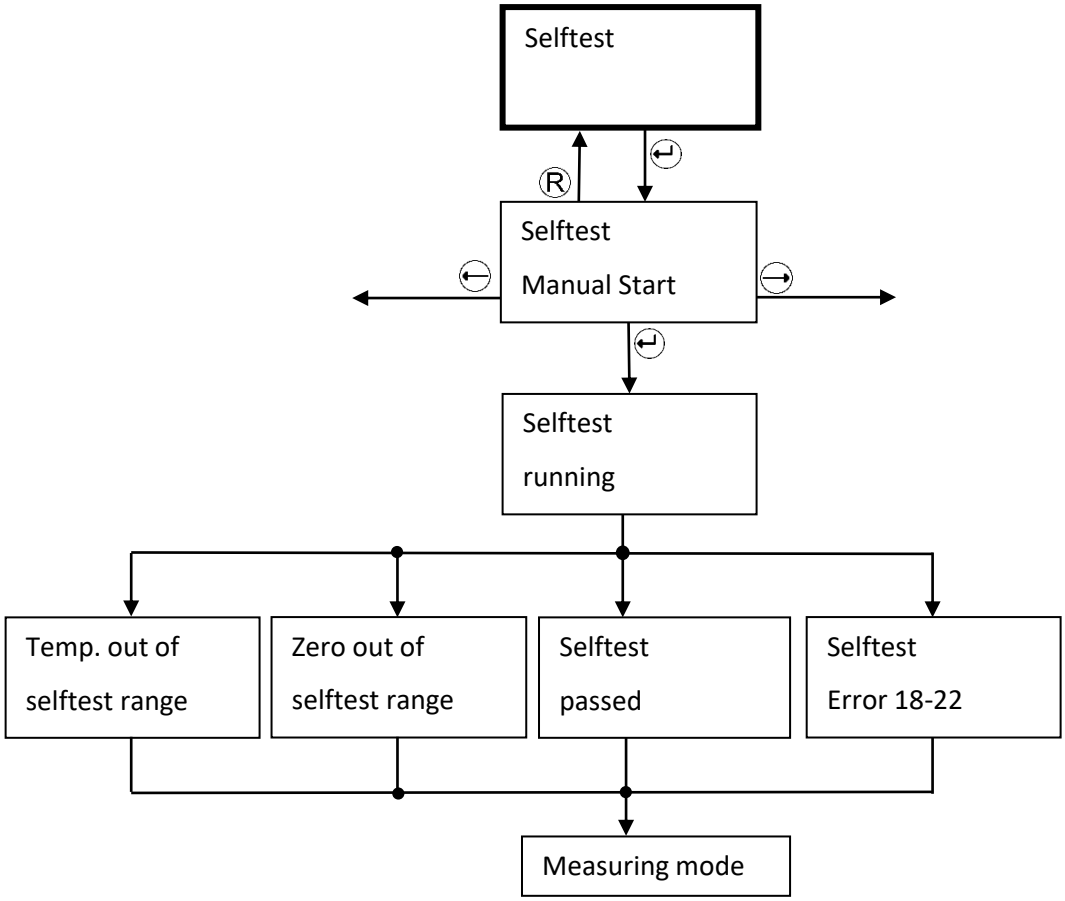

Picture 16: Submenu "Selftest - Manual Start"

5.3.2.3 Submenu Self-test – Start time

Here is how to schedule the self-test. Access only in the service menu. Once entering this menu, you must finish it completely. The factory setting for the self-test start time is 8:00 a.m.

Procedure:

Push ↵ , **„ON“** is now flashing, with → or ← you can change the value to **“OFF”** and saves the value with ↵. Now the hour digit is flashing. Increase with →, decrease with ←, save with ↵. Now the minute digit is flashing. Increase with →, decrease with ←, save with ↵.

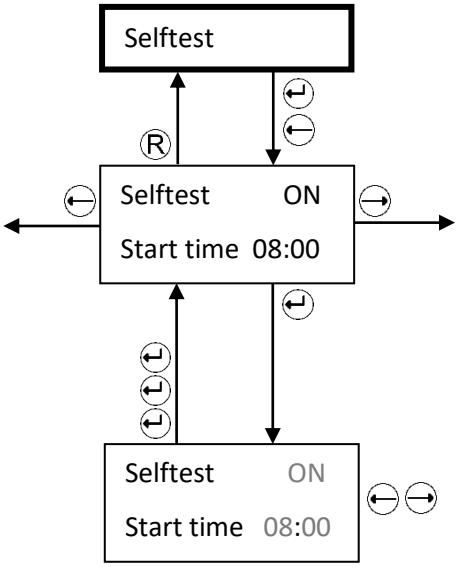

Picture 17: Submenu Self-test - Start Time

!

- If operated as a SIS according to IEC 61508 (functional safety), the self – test must be activated.
- Schedule the self – test to time, when a short – term non active detector is the most acceptable. Do not schedule all sensor heads to the same time.

5.3.2.4 Submenu Self-test - Monitoring

The menu „**Selftest - Monitoring**“ activates the output signal during the self-test. This allows to record the test process and response curve.

The ex – works setting is OFF. This can only be changed in the service menu!

When **„Monitoring ON“** is active, the SF-open collector output is passive. This way the system status is clearly defined: SF plus signal = self-test in progress. See chapter 6.1 - system states.

Procedure:

By pushing ↵ **„OFF“** is flashing, with → it can be change in **„ON“** and the value can be saved with ↵.

The new setting is active after returning to measuring mode.

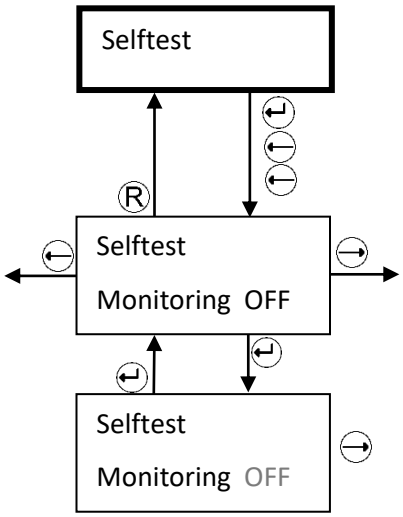

Picture 18: Submenu "Selftest - Monitoring off"

5.3.3 Calibration

The menu **„Calibration“** can be accessed in the password - protected service menu. Before starting a gas calibration wait until the sensor head and the sensor module have the same temperature!
You need a Statox 560 calibration adapter art.# 562984, an inert gas tube (i.e. art. # 556710) and span gas within the specified concentration range (see Chapter 11). If you are not sure, if you are working in clean atmosphere, use synthetic air for zeroing.

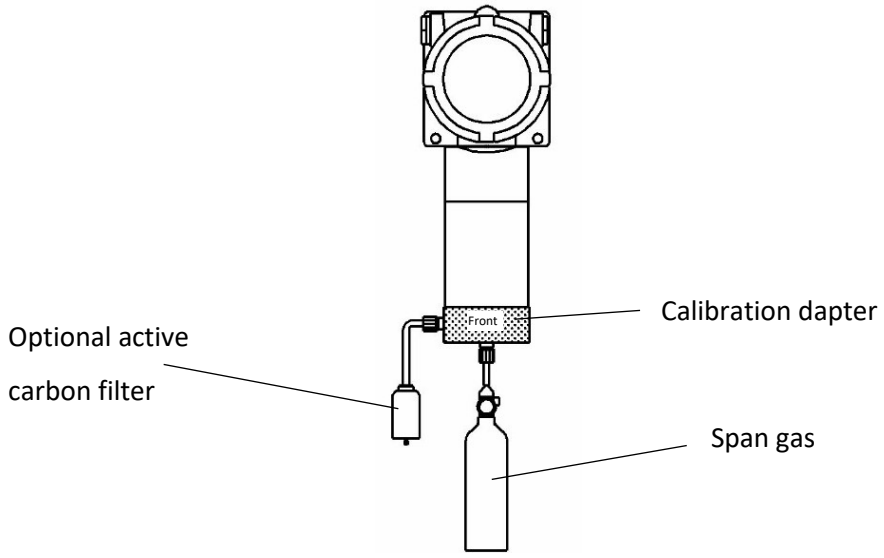

Picture 19: Calibration with gas

Procedure (see Picture 20):

1. Enter the service menu and select **„Calibration“**. After ↵ the last valid calibration is shown.
2. Enter the menu **„Calibration Start“** with ⊖ and confirm with ↵. The timeout is now 30 minutes!
3. The display shows **„Zeroing Please wait“** until zero is stable.
4. After zero has stabilized, the display shows **„Zero found - Apply span gas“**. You may now stop the calibration procedure, if you only wanted to adjust zero by pushing Ⓡ. If you want to continue with a gas calibration, confirm with ↵ . The display now shows **„Apply span gas“**.
5. Check that the O-Ring sits correctly in the calibration adapter. Push the gas adapter onto the protective cylinder by slightly turning it. The side marked with “Front” points toward the user. Connect the gas tube at the bottom side. Switch the gas on. Flow should be around 30 l/h (500 ml/min).
6. You may connect an active carbon filter to the calibration adapter exhaust, if you want to avoid span gas getting into the environment. This filter must not create a dynamic pressure. This would compromise accuracy!
7. As soon as the sensor head detects gas, the display shows **„Gas is on“**.

8. When the sensor head has found a plateau, the sensor head requires to enter the span gas concentration in ppm. The display shows the last used concentration, change with the arrow buttons and confirm with ↵.
9. After saving the concentration the display shows **„Calibration done“** and the actual concentration in the gas adapter. Switch the gas off and remove the calibration adapter.
10. Let the measured value drop to zero before going back with ↵ and into Ⓡ the measuring mode, in order to avoid false alarms.

In case an error occurred during calibration, the relevant error code will be displayed. Potential errors see Chapter 6.2!

! If zero or span adjustment fails, the sensor head continues with the old parameters. The display will show **ZERO ADJUSTMENT FAILED** or **CALIBRATION FAILED** alternatingly with the measured value until a valid zero or span adjustment has been performed.

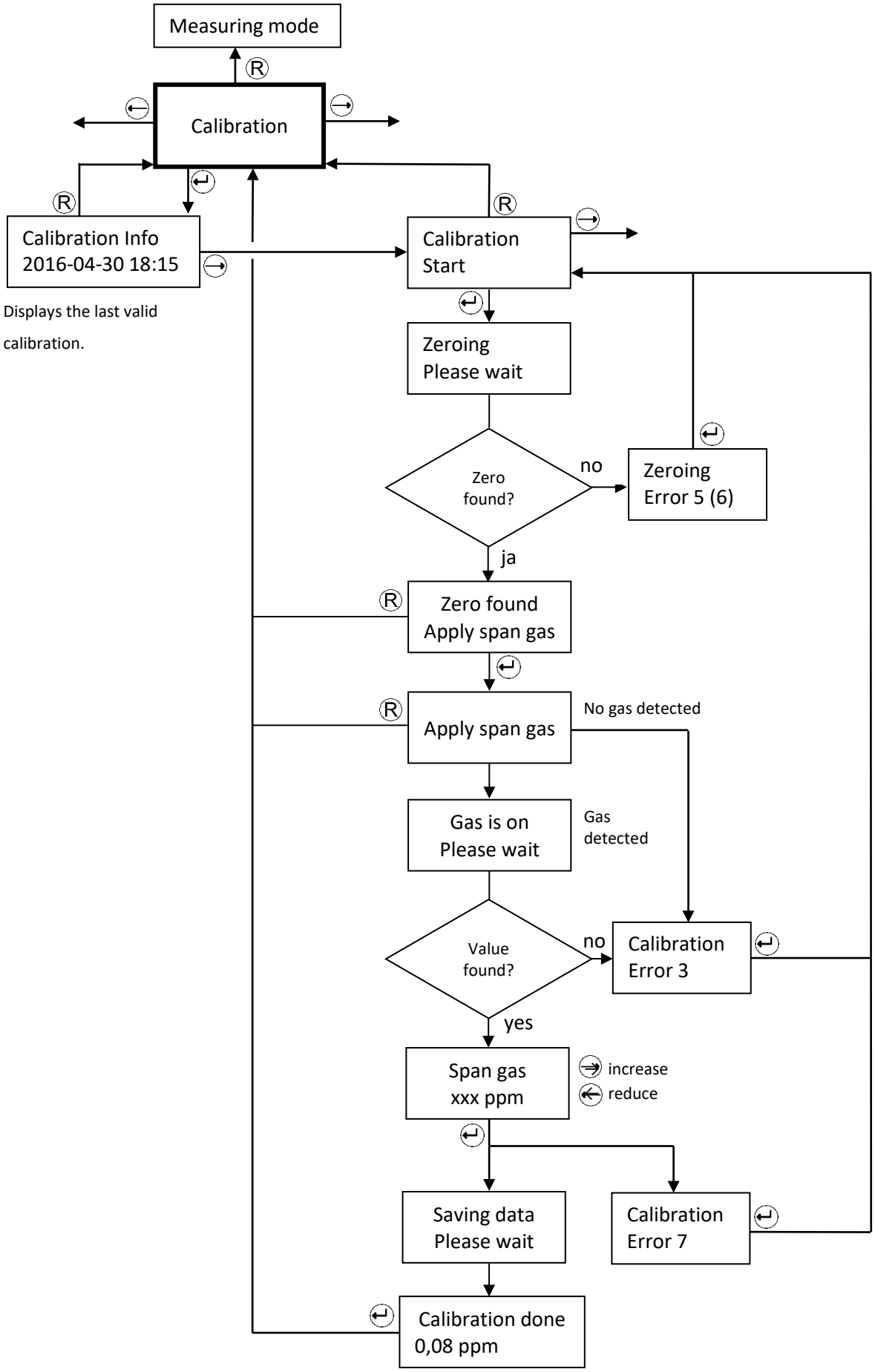

Picture 20: Schematics Calibration

5.3.4 Change Sensor – Sensor Module / Sensor / Generator Cell Replacement

5.3.4.1 Sensor module replacement

In menu **„Change Sensor“** you can replace the sensor module. In this menu the sensor head is in the service mode, the timeout deactivated. Thus you will not create an alarm when removing the sensor module.

Do not remove the sensor module during the measuring mode! You will create an alarm and probably damage the module!

Caution: EMC - sensitive parts!

- Always be properly grounded when touching the sensor module.
- Use a wrist strap connected to a properly grounded work surface and use properly grounded tools and equipment. Wear conductive clothing and shoes.
- Avoid touching pins, leads and circuitry.

Procedure (see Picture 24):

1. Enter the menu **„Change Sensor“** and confirm with ↵. The display shows **„Change Sensor - Replace“**. Now the measuring head is in the service mode.
2. Remove the protection cylinder counterclockwise.
3. Pull the sensor module downwards to remove it. The display now shows **„Replace”** flashing.
4. Take the new sensor module out of the packaging and remove the shortening bridge as far as applicable. Check for mechanical damage!
5. Align the guiding pins with the relevant holes and plug the sensor module in.
6. Fasten the protection cylinder fingertight. Check if the sealing washer is clean.
7. The sensor head will now read the sensor module parameters, while the display shows **„Loading Parameter“**. If these are not legible, you will get an error message (see chapter 6.2).

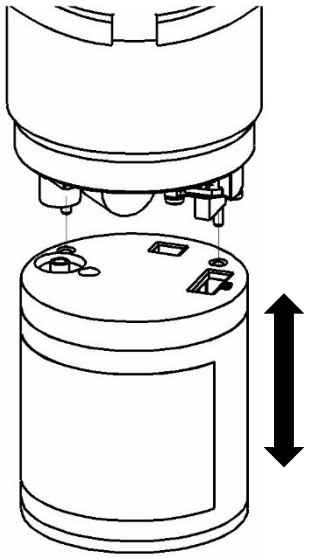

Picture 21: Changing the sensor modules

8. If the measuring head has operated with a different sensor type, you get the message **„Change of sensor type!“.** If you really want to change, confirm with ⊖. This is intended to prevent the user from connecting a wrong sensor module. If you don't want to work with the plugged module you can easily remove the module by pulling it down. Now you can use the desired sensor module.
9. During the warm-up period the display shows alternatingly the gas / measuring range / parameter version and serial number of the sensor / best before date in the format ww/yy. The warm-up may take a few minutes.
10. When the warm-up is completed, the measuring head goes into the measuring mode. Allow some time to stabilize (1 hour), then perform a zero adjustment for maximum accuracy (see chapter 5.3.3).

5.3.4.2 Sensor and Generator Cell replacement:

Instead of replacing the entire sensor module, you can also replace the generator cell or the sensor. Remove the sensor module cover. Observe the procedures required when handling EMC sensitive parts. Check the sensor module type plate for the relevant article numbers.

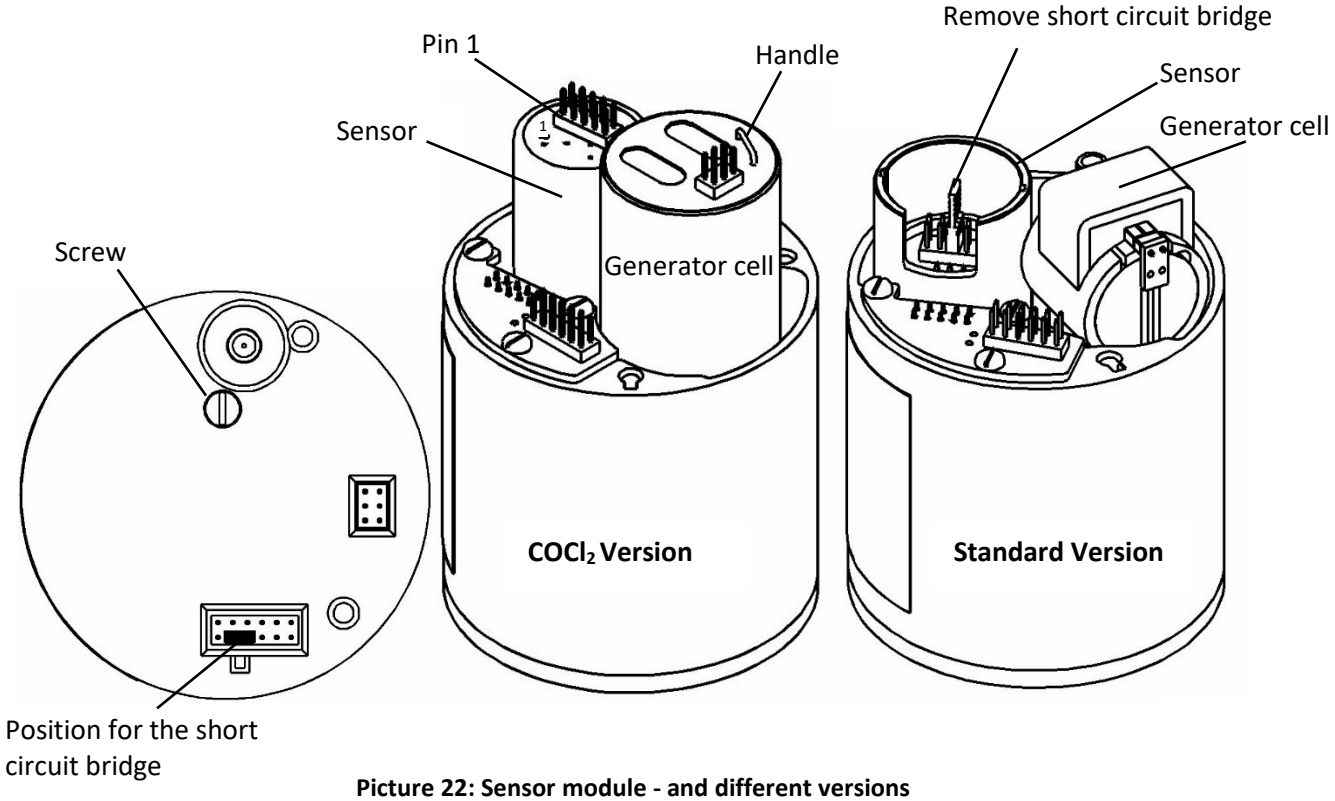

Picture 22: Sensor module - and different versions

Sensor replacement:

Unplug the old sensor. Extract and remove the short circuit bridge of the new sensor if there is any. Plug the new sensor, the position of the sensor plug is remote to the module PCB (connect the red wire of the flat ribbon cable to pin 1). Check for correct positioning! The flat ribbon cable should sink between sensor and PCB.

Standard Generator Cell Replacement:

Remove the generator cell by pulling it upwards from its seat. Unplug it. Remove both protective caps from the new generator cell. Plug it in with the cable looking downwards. Push until the stop.

$COCl_2$ Generator Cell Replacement:

Remove the generator cell by pulling its handle upward with a screw driver. Remove the protective cap form the new generator cell. Take care not to damage the O-Ring. Insert the new cell with the O – Ring downwards. Turn the cell until the coding latches and push it downwards until the stop.

Close the sensor module. Make sure the top is well – aligned and no wires are jammed. Do not tighten the screw too hard.

The spare sensor comes with a fresh dust – and splash guard filter. Remove the old filter carefully with a screw driver, insert the new filter and press it until it latches. You may use the handle of the magnetic pin as a tool to do that.

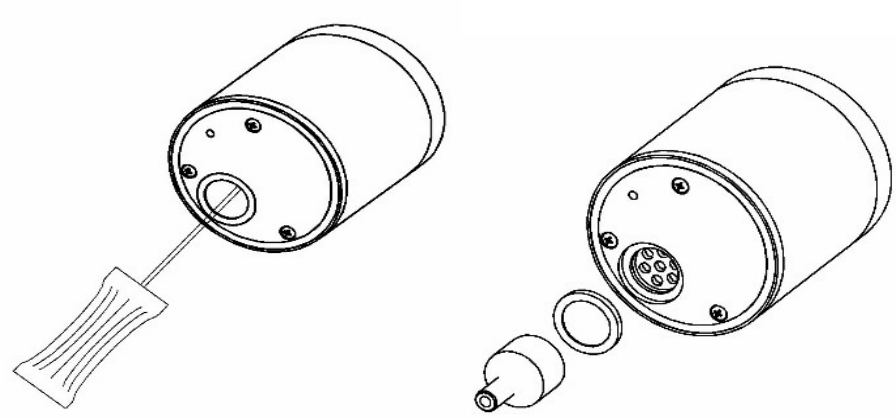

Picture 23: Replacement of the dust and splash guard

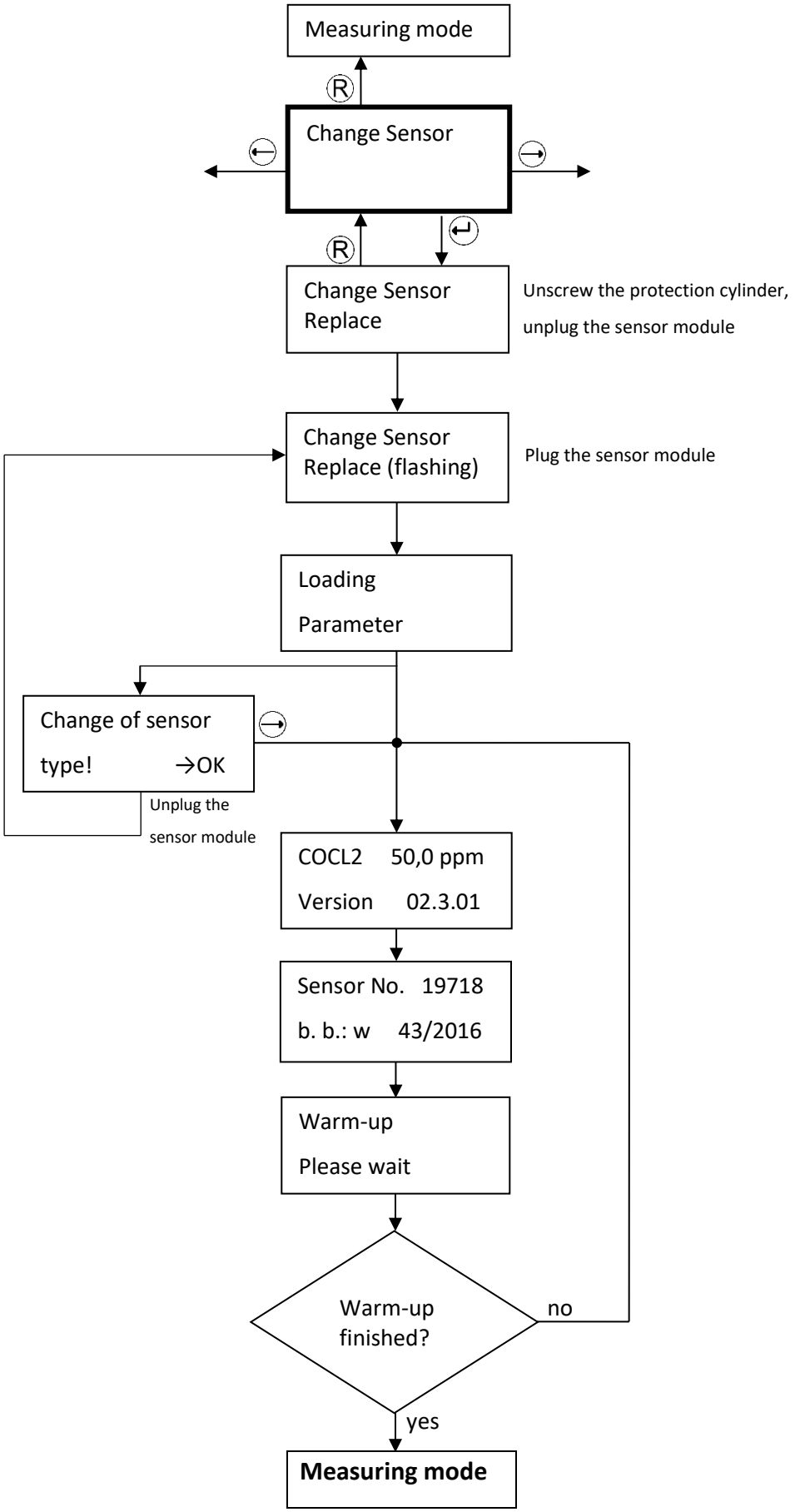

Picture 24: Schematics Change Sensor

5.3.5 Errors Info

In menu **„ERRORS INFO“** you can check for recently occurred errors. It has no sub – menus. A listing of potential error codes you will find in chapter 6.2.

5.3.6 Alarm History

In menu „**ALARM HISTORY**“ you can check the recent 3 concentration alarms A1 and A2. You can read in each case the alarm start time, concentration maximum and the alarm end time.

The latest alarm is shown first. If a new alarm occurs, the oldest alarm is deleted.

If no alarm has occurred the reading is **„no data“**. In order to achieve a correct recording it is essential that the system has been set to the correct local time (see chapter 5.3.11).

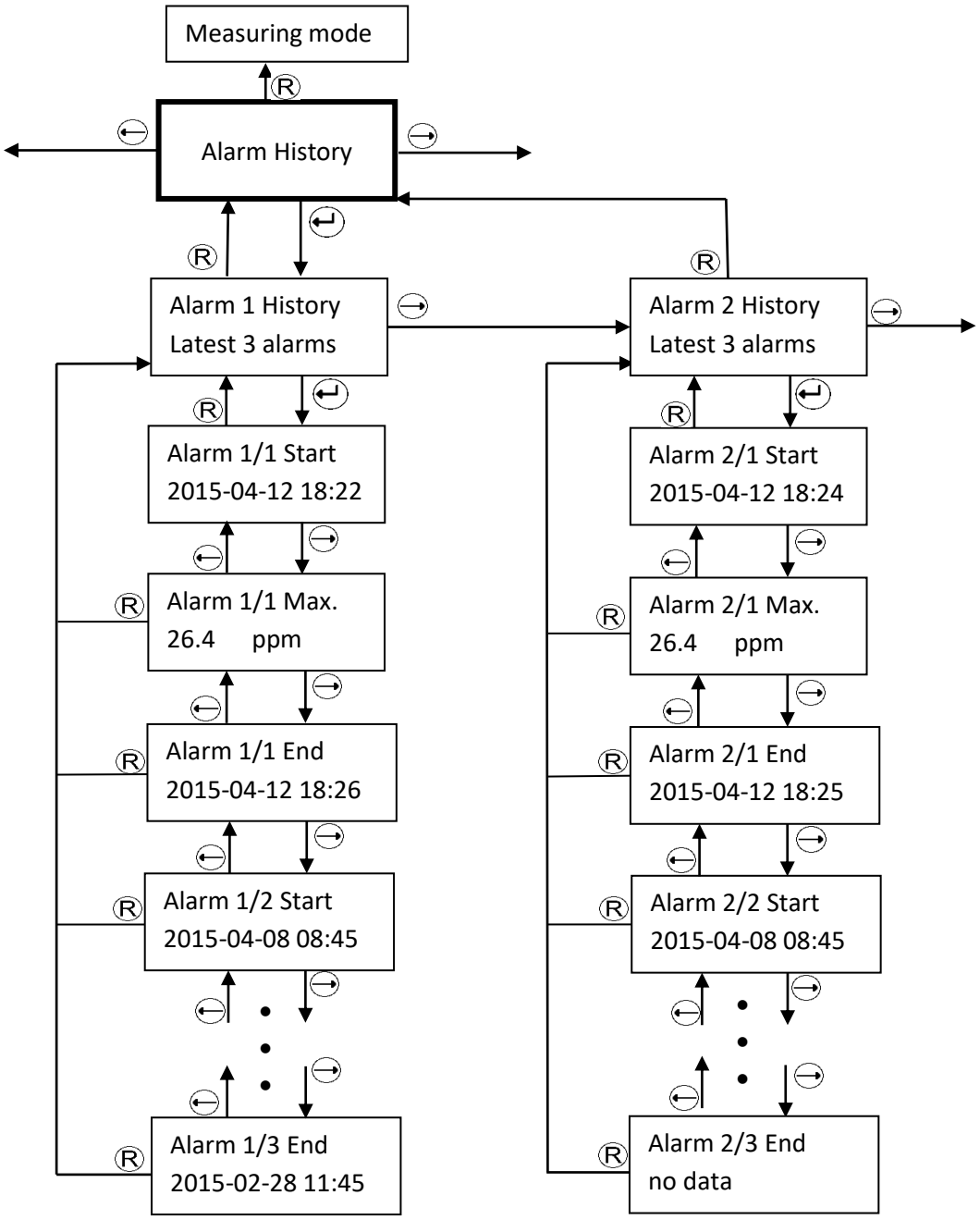

Picture 25: Schematics alarm history

5.3.7 Sensor Info

The menu **„SENSOR INFO“** gives you information about the following parameters:

- Gas, measuring range and parameter set of the sensor
- Serial number and best before date of the sensor (best before format calendar week / year)
- Internal calibration factor **F** (this parameter is for internal use only) of the sensor and its total exposure to gas.

Total exposure is the product concentration * time.

Example: exposure to 10 ppm during 2 hours = 20 ppm * h.

! If the best – before date has been exceeded, it is essential to replace the sensor or to perform a gas calibration.

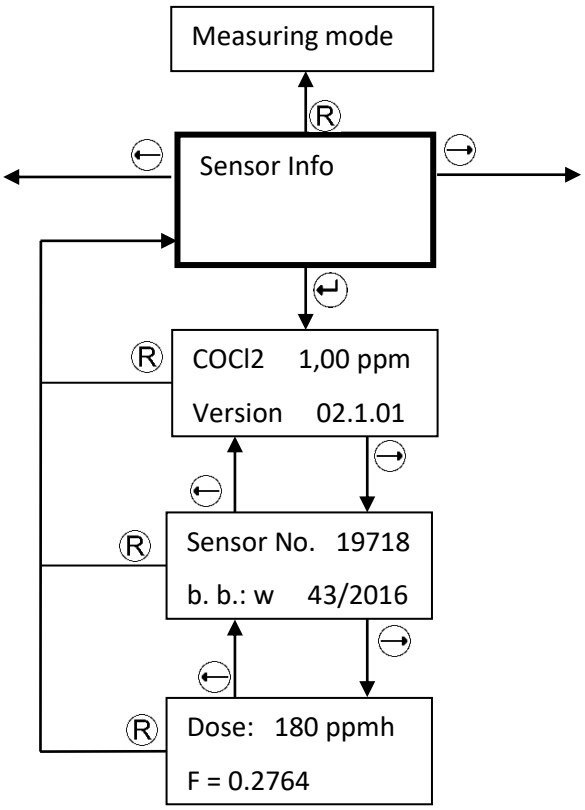

Picture 26: Schematics sensor info

5.3.8 Temperature

In this menu you can read the measuring head temperature in °C. There are no further functions.

5.3.9 Firmware

This menu provides information of the measuring head firmware version. There are no further functions.

5.3.10 Alarm Relays

In this menu you can program the alarm relays for **A1, A2 and MR**. Access for changes in the setting is only in the service menu possible. The following parameters are user programmable:

- Concentration alarms **A1** and **A2** can be set to be latching (**„hold“**) or to reset automatically (**„reset“**).
- The open collector outputs **A1**, **A2** und M**R** (Maintenance Request) can be set to be **„active“** or **„passive“** in case of an alarm.
- The alarm thresholds **A1** and **A2** can be set within a specified range (see chapter 11). **A2** cannot be set lower than **A1**+1 unit. If you adjust A1 higher, than A2 will automatically be set to **A1** + 1 unit.

Additional information:

- As soon as an alarm threshold is exceeded, the respective LED goes on and the output is activated. See chapter 6.1!
- Alarms can only be reset, when the alarm threshold is no longer exceeded. Reset latching alarms with the reset button Ⓡ.
- The programmed alarm thresholds will not be changed by a sensor replacement, as far as the same sensor type is used**. If you change the sensor type, the ex – works settings of the sensor module will apply**. These can be changed to user – specific values.

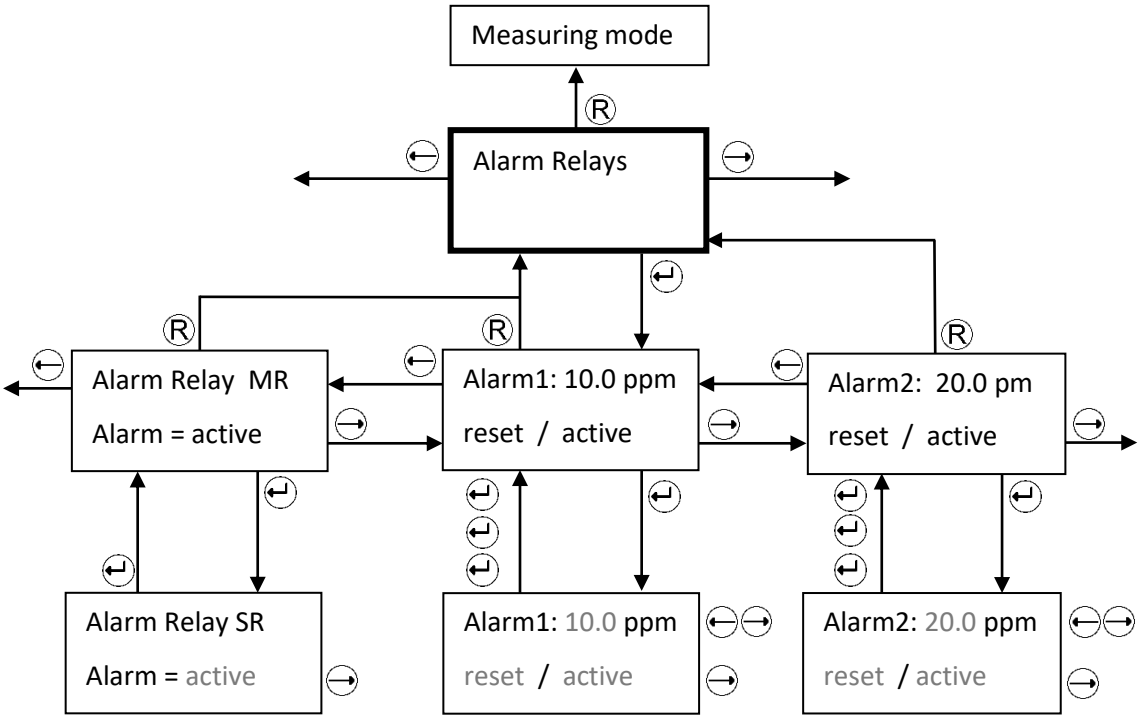

Picture 27: Schematics alarm relays

Procedure:

1. Select an output and confirm with ↵.
2. The first parameter flashes and can be changed with ← and →. Confirm your setting with ↵.
3. Now the next parameter starts flashing. Change with the arrow buttons showed in Picture 27 and confirm with ↵.
4. After having set the last parameter, the program returns to the selection menu. You may now read and check your settings.
5. Button Ⓡ brings you back to the main menu.

5.3.11 Real Time Clock

The clock is ex-works set to central European time CET. If necessary set to local time. The clock is battery buffered. Settings must be done in the service menu.

! Only a correct setting of the local time makes sure you get a correct alarm history.

Procedure:

Push ↵, now the year is flashing. Change the value with → and ← and confirm with ↵. Set month, day, hour and minute accordingly. A final ↵ brings you back to the main menu.

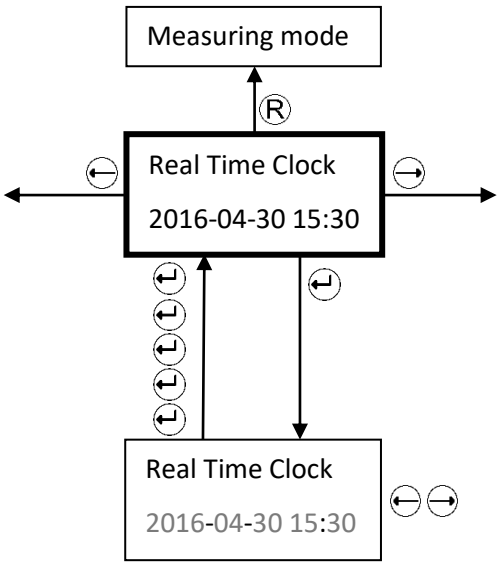

Picture 28: Schematics real time clock

5.3.12 Service Output

In menu **„Service Output“** you can set the analog output to 2 or 4 mA during service. Ex – works setting is 2 mA. The setting must be done in the service menu.

Procedure:

- Push ↵. The actually set output is flashing. Change the value with →.
- Push ↵ to save your setting and return to the main menu.

! If you operate the measuring head as a SIS according to EN 50402 or IEC 61508 (functional safety) this output must be set to 2 mA.

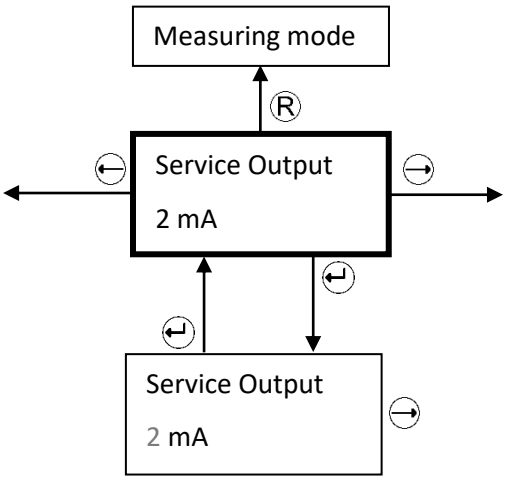

Picture 29: Schematics service output

5.3.13 Function Test

In Menu **„Function Test“** you can test the function of the display, the analog output and the alarm outputs. Access only in the service mode. In this menu a timeout of 30 minutes is valid.

Function Test - Display:

You can display a checkerboard pattern, an inverted checkerboard pattern and 3 displays showing all possible fonts. Step forward with ⊖, return to the superior menu with Ⓡ.

Function Test - mA Output:

In this menu you can simulate 0, 2, 4, 12, 20 und 22 mA analog output.

Step forward with ⊖, back with ⊖. Return to the superior menu with Ⓡ.

Function Test - Alarms:

In this menu you can test the alarm1, alarm2, system failure and maintenance request alarm outputs and LEDs in the set configuration. Step forward with ⊖. Return to the superior menu with Ⓡ .

Definition of the analog outputs associated with alarms:

- Alarm 1 = 6 mA
- Alarm 2 = 10 mA
- SF = 0 mA
- MR (Maintenance request) = 4 mA.

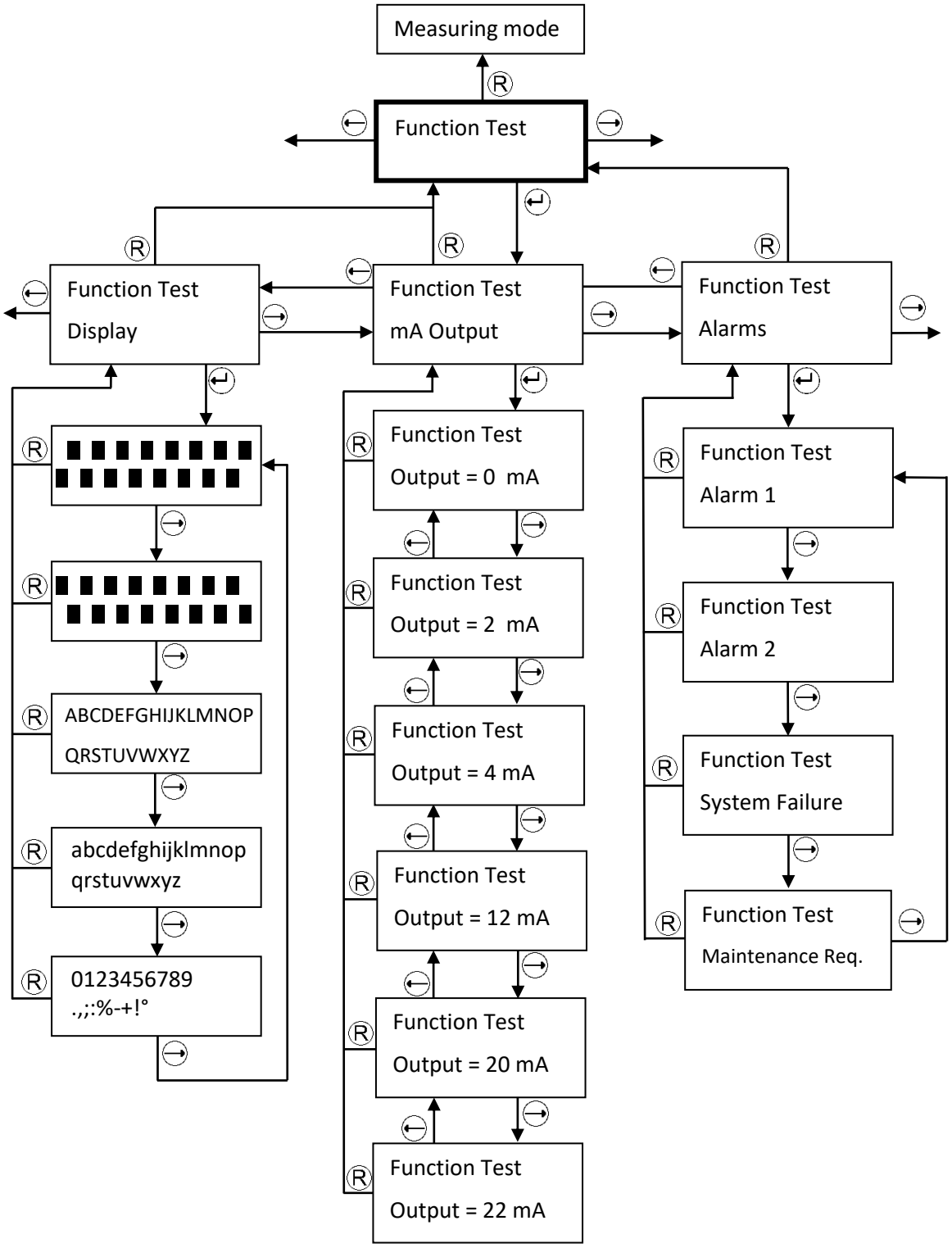

Picture 30: Schematics Function Test

5.3.14 Maintenance Request

In menu **„Maintenance Request“** you can program whether maintenance request shall be signalized on the analog output. Ex – works setting is **„NO“**.

Access the service menu to change settings!

Possible alternative settings:

- Maintenance request = system failure = permanent 0 mA.
- Maintenance request = 1 hourly drop to 1, 2 or 3 mA for 5 seconds pulse. These pulses start 10 s after the last self-test and end when the reason for the maintenance request has disappeared. This pulse is only generated in the measuring mode.

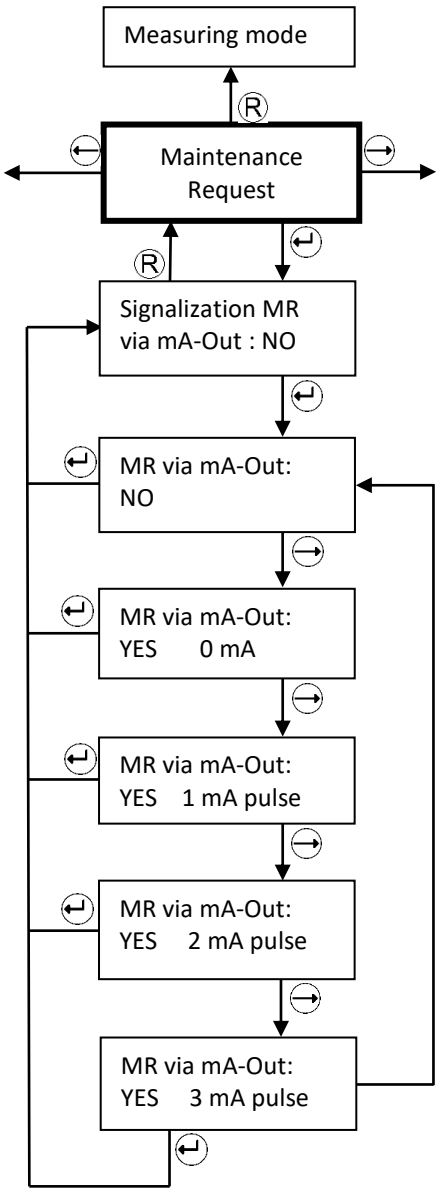

Actual setting

The selected setting is flashing. Change with ⊖. Safe with ↵. In the superior menu your new setting will be displayed.

Picture 31: Submenu Maintenance Request

6 System Status and Error Messages

If the display is dark and green LED off, the power supply voltage is off, too low or its polarity is wrong. If none of this is the case, it could be a broken fuse.

! Replacement of the fuse must be done by Compur Monitors!

6.1 System Status

System status	Analog output	Display	LEDs				switching outputs 4)			
			A1 yellow	A2 yellow	SF red	ON green	A1 3)	A2 3)	WB 3)	SF
Measuring mode	4 - 20 mA	Measured value 8)	OFF	OFF	OFF	ON	passive	passive	passive	active
Alarm 1 2)	4 - 20 mA	Measured value	ON	OFF	OFF	ON	active	passive	passive	active
Alarm 2 2)	4 - 20 mA	Measured value	ON	ON	OFF	ON	active	active	passive	active
Out of range	22 mA	Full scale value flashing	ON	ON	OFF	ON	active	active	passive	active
System failure	0 mA	Error code	OFF	OFF	ON	ON	passive	passive	passive	passive
Maintenance request	4-20 mA 6)	Measured value	OFF	OFF	flashing 5)	ON	passive	passive	active	active
Self-test	2 / 4 mA 1)	Self - test	OFF	OFF	flashing	ON	passive	passive	passive	active
Self-test Monitoring	4-20 mA 7)	Self - test	OFF	OFF	flashing	ON	passive	passive	passive	passive
Service-Mode (password protected)	2 / 4 mA 1)	Service menu	OFF	OFF	flashing	ON	passive	passive	passive	active
Info - Mode (no password)	4-20 mA	Service menu	OFF	OFF	OFF	ON	passive	passive	passive	active
Power off	0 mA	-	OFF	OFF	OFF	OFF	passive	passive	passive	passive

1. Program in menu **Service Output** (see chapter 5.3.12).
2. If an alarm has been set to AUTO RESET, the actual status is displayed. If it has been set to HOLD, the last alarm status will stay. To delete a latching alarm press the **Reset- Button**.
3. Ex works setting. To change see chapter 5.3.10.
4. Alarm output active means the open collector output is current fed. The SF output is always active in order to detect a potential power outage.
5. Periodic double flash every 5 seconds.
6. Ex works setting. Procedure to change see chapter 5.3.14.
7. No ex works setting, programming procedure see chapter 5.3.2.4. The SF Relay is passive in this mode, to differentiate from the 4-20 mA in the measuring mode.
8. The measured value alternates with the message „**Zero adjustment failed“** or „**Calibration failed”** in case any of these procedures has failed.

6.2 Error messages

The Statox 560 internal diagnosis differentiates between “System failure” (SF) and “Maintenance Request” (MR).

A system failure is a fatal dysfunction. The system is unable to operate. Except power outage these errors are shown on the display.

A maintenance request may be caused by operating errors or short – term problems during self-test or calibration. These error messages mostly are displayed only for a short time. An error history can be read in menu “**Errors Info**“. A maintenance request which has been caused by a non - successful self-test will automatically be deleted by a successful self-test (self-healing).

Error	Meaning / Reason	Rating	Correction
1	The internal sensor diagnosis (heartbeat) has detected a sensor problem.	SF	Push **RESET** to delete. In case of recurrence replace the sensor.
2	4-20 mA output error. No cable connected, cable interrupture, bad contact.	SF	Check connections, delete with **RESET**. If operated as Stand-Alone-Unit, short-circuit analog output. If necessary call your Compur representative.
3	No plateau found **during calibration**. (no gas, unstable gas concentration, sensor out of specifications)	MR	Recalibrate or replace sensor. In the meantime the sensor head will operate with the old calibration parameters.
4	Negative signal **in measuring mode**. Zeroing has failed or new sensor needs time to stabilize.	MR	Adjust zero. Check for interferent gases. Eventually replace sensor.
5	**When zeroing** the permissible sensor current was too high**.** Eventually gas present during zeroing.	MR	Adjust zero. If necessary use synthetic air. Check for interferent gases. Eventually replace sensor. Sensor head operates with the old zero parameter.
6	**When zeroing** no stable signal was found.	MR	Adjust zero. If necessary use synthetic air. Check for interferent gases. Eventually replace sensor. Sensor head operates with the old zero parameter.
7	Sensor signal too high or too low **during calibration**. Used the correct gas?	MR	Check gas concentration, use gas within specifications. If necessary replace sensor.
8	Temperature out of specifications or thermo – sensor defective.	SF	Wait for temperature to return to the specified range. Then **RESET.** If the problem persists call your Compur representative.
9	Serial Peripheral Interface (SPI)-failure	SF	Delete with **RESET**, if the problem persists call your Compur representative.
10	Sensor FRAM – problem, parameters of sensor cannot be read.	SF	Delete with **RESET**, if the problem persists replace sensor or check polarity inversion of the sensor. If the problem persists call your Compur representative.
11	Amplifier error.	SF	Delete with **RESET**. if the problem persists call your Compur representative.
12	Potentiostat error.	SF	Delete with **RESET**, if the problem persists call your Compur representative.
13	Failure in the internal supply voltage of the measuring computer.	SF	Delete with **RESET**, if the problem persists call your Compur representative.

Error	Meaning / Reason	Rating	Correction
14	Pump failure during measuring mode.	SF	Delete with **RESET**, if the problem persists call your Compur representative.
15	Hardware problem	SF	Delete with **RESET**, if the problem persists call your Compur representative.
16	The self-test has been cancelled three times because gas was present.	MR	Check for plausibility, eventually expose sensor to synthetic air. Adjust zero. If problem persists, replace sensor. If necessary select a more suitable self-test schedule. **This error disappears after a successful self-test.**
17	The self-test has been cancelled three times because temperature was out of range.	MR	Check for plausibility, if necessary select a more suitable self-test schedule. **This error disappears after a successful self-test.**
18	Self-test signal too low. Sensor, generator cell or pump defective.	MR	Restart self-test. **This error disappears after a successful self-test.** Calibrate sensor. If necessary replace the pump or the gas generator.
19	Sensor signal too high after self-test. Sensor too slow.	MR	Restart self-test. **This error disappears after a successful self-test.** If necessary replace sensor.
20	Pump problem during self-test. Pump polluted or defective.	MR	Restart self-test. **This error disappears after a successful self-test.** If necessary replace pump.
21	Generator current too high. Generator cell defective or hardware problem.	MR	Replace generator cell. If problem persists, call your local Compur representative. **This error disappears after a successful self-test.**
22	Generator current too low. Generator cell defective or hardware problem.	MR	Replace generator cell. If problem persists, call your local Compur representative. **This error disappears after a successful self-test.**
23	Generator activated during measuring mode.	SF	Delete with **RESET.** If problem persists, call your local Compur representative.

Table 4: Error codes, assessment and corrective action

7 Maintenance and Cleaning

7.1 Routine treatment

- Perform visual inspection on a regular schedule. In particular check the washer between flange and protection cylinder for its condition.
- Check regularly for pollution, especially the area of the gas entry.
- Clean the Statox 560 with a humid cloth. Do not use any detergent, solvent, or water jet.
- If the Statox 560 is operated as a SIS requiring functional safety, a regular prooftest is mandatory.
- Check the real time clock in regular time intervals and adjust clock time when necessary (see chapter 5.3.11).

7.2 Replacing the pump

For the exchange of the pump you have to remove the sensor module. Open the Change Sensor menu and then do steps 1 to 3 (see chapter 5.3.4.1).

Procedure (see Picture 32):

- Release the pump plug by pushing down the safety bar and pulling the plug at the same time.
- Loosen the pump screw by one turn counterclockwise and pull out the pump.
- When connecting the new pump, the free pump nozzle must be plugged into the narrow opening and the retaining plate must be lead under the pump screw. Shift the pump to the stop and tighten the screw.
- Connect the pump plug.
- Mount the sensor module. See menu item **Change Sensor**, chapter 5.3.4.1, from point 5.

! Leave the filter at the pump input! It protects against pollution and regulates the pump flow.

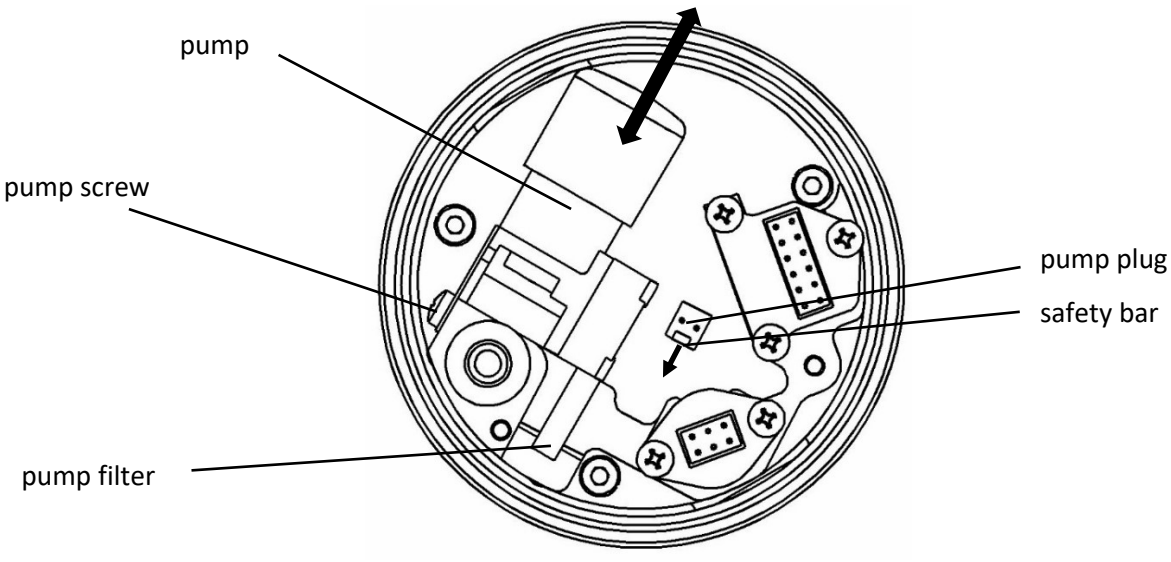

Picture 32: Replacing the pump - View from below

8 Accessories and spare parts

Name	article number
Ex e junction Box (10 conductors)	562988
eXLink coupling 6+1 wire	805594
Statox 502 Control Module	557000
Statox 560 calibration adapter	562984
1 meter gas hose 4 x 1	556710
Statox 560 pump	562982
Statox 560 magnetic pen	512277
Sensor module $COCl_2$ 0.5 ppm	562920
Sensor module $COCl_2$ 1 ppm	562922
Sensor module $COCl_2$ 50 ppm	562924
Sensor module Cl_2 5 ppm	562910
Sensor module Cl_2 10 ppm	562912
Sensor module HCN 20 ppm	562930
Sensor module HCN 50 ppm	562932
Sensor module HCN 100 ppm	562934
Sensor module H_2S 100 ppm	562928
Sensor module CO 300 ppm	562916
Sensor module HCl 100 ppm	562936

9 Functional Safety

This Chapter provides all information required to operate the Statox 560 as a Safety Instrumented System (SIS) rated SIL 2.

The intended use of the Statox 560 is in the responsibility of the customer.

9.1 Safety Functions

Safety Function 1 (SF1)

The Statox 560 including gas sensor detects a toxic gas. The concentration is monitored at the analog output as current in the range 0 - 22 mA. Two open collector outputs monitor the system status maintenance request (MR) and system failure (SF). The system status is also monitored at the analog output with:

- 0 mA = System failure
- 2 mA = service mode
- 4 mA = 0% of the measuring range
- 20 mA = 100% of the measuring range
- 22 mA = over range

Safety Function 2 (SF2)

The Statox 560 including gas sensor detects a toxic gas. It monitors exceedings of the programmed alarm thresholds at the open collector outputs A1 and A2. The two open collector outputs maintenance request (MR) and system failure (SF) are for maintenance request and system failure warnings.

9.2 Diagnostic Time and Measuring Cycle

The maximum internal fault detection time is 24 hours. Within this period hardware and sensor failures will be detected, and the sensor head will go into safe mode if necessary.

The measuring cycle is 1 second. The output current, the display and the open collector outputs are updated in the same time interval.

9.3 Installation and Parameter Settings

The following procedures are mandatory to be performed in order to achieve a valid data base with regards to failure rates and SFF!

- The automatic self-test must be activated (see chapter 5.3.2).
- The system failure and the maintenance request output (see chapter 3.7) must be connected to an external alarm device each (e.g. horn, flashlight, flashing LED).
- The signal current during the service mode must be set to 2 mA (see chapter 5.3.12), in order to have a clear differentiation from the measuring mode.
- The outputs A1 and A2 must be set to „passive“ (see chapter 5.3.10), in order to detect a potential cable rupture (only requested for safety function 2).
- Ambient conditions must be within specifications (see chapter 10).

9.4 Schedule Maintenance

The following maintenance work must be done on a regular schedule in order to maintain accurate gas detection:

- Observe the prooftest intervals. Additionally to the prooftest (see chapter 5.3.1), perform a functional test (see chapter 5.3.13) in the same interval.
- When the sensor best before has been exceeded, either replace the sensor or perform a prooftest or a gas calibration.
- In harsh environment, where a poisoning, pollution or other damage of the sensor is likely, shorten the prooftest interval.
- If you receive corresponding error messages (see chapter 6.2), replace the sensor or perform a gas calibration.
- Observe the cleaning and maintenance recommendations in chapter 7.

9.5 Repair and Spare Parts

The Ex d housing and the electronics do not include any customer serviceable parts. Use only original spare parts and consumables.

9.6 Failure Rates and Safe Failure Fraction

The following data have been assessed for Statox 560 system (basemodule Statox 560 inclusive sensor) in a FMEDA-Hardware-Assessment, performed by company SGS-TÜV Saar GmbH (Report # K1TK0001):

Safety function 1 (SF1)					
Instrument	**Sensor type**	**λ_s [FIT]**	**λ_{du} [FIT]**	**λ_{dd} [FIT]**	**SFF [%]**
Statox 560	**Cl_2**	536.68	118.45	3732.86	97.30
	HCN	593.14	182.17	1778.68	92.87
	$COCl_2$	581.43	168.55	4391.01	96.72

Safety function 2 (SF2)					
Instrument	**Sensor type**	**λ_s [FIT]**	**λ_{du} [FIT]**	**λ_{dd} [FIT]**	**SFF [%]**
Statox 560	**Cl_2**	497.49	138.61	3625.48	96.75
	HCN	553.95	202.33	1671.30	91.67
	$COCl_2$	542.24	188.71	4283.63	96.24

FIT: Failures in Time (10^{-9} failures per hour) SFF: Safe Failure Fraction

Table 5: Failure rates and SFF in different configurations

9.7 Average Probability of Failure on Demand

Statox 560 has been designed to operate in the low demand mode.

Table 6 shows the PFD_{avg} values of both safety functions in the specified prooftest intervals.

Formula: $\mathbf{PFD_{avg} = 0.5 * T_{Proof} * \lambda_{du}}$. Presuming that the repair times are significantly lower than the prooftest intervals.

The PFD values are significantly lower than the values required to comply with SIL 2 (10^{-2} – 10^{-3}).

Table 6: PFD_{avg} - Values for different configurations

PFD_{avg}	**Prooftest interval**	**6 Months**		**12 Months**	
		SF1	**SF2**	**SF1**	**SF2**
Statox 560 with sensor type	**Cl_2**	-	-	$5.19*10^{-4}$	$6.07*10^{-4}$
	HCN	-	-	$7.98*10^{-4}$	$8.86*10^{-4}$
	$COCl_2$	$3.69*10^{-4}$	$4.13*10^{-4}$	-	-

PFD_{avg}: Average Probability of Dangerous Failure on Demand

9.8 Classification of the Safety Integrity Level (SIL)

According to standard IEC 61508-2:2010 the Statox 560 is classified as a type B part system (complex element). As specified in standard IEC 61508-2:2010 table 3, with a hardware failure tolerance (HFT) = 0 and a SFF of > 90 % the Statox 560 complies with the requirements for a SIL2 rating in both safety functions (see Table 7).

SIL Classification	Prooftest interval	SF1		SF2	
		6 Months	12 Months	6 Months	12 Months
Statox 560 with sensor type	Cl_2	-	SIL 2	-	SIL 2
	HCN	-	SIL 2	-	SIL 2
	$COCl_2$	SIL 2	-	SIL 2	-

Table 7: Safety Integrity Levels for different Configurations

9.9 Livetime

The sensor head livetime without sensor is estimated to be 10 years. The calculated failure rates are valid within this lifetime period.

10 General Technical Data

Product name:	Statox 560
Type:	5377
Manufacturer:	COMPUR Monitors GmbH & Co. KG, Weissenseestr. 101, D-81539 Munich
Power supply:	24 (16-30) VDC
Power consumption:	max. 2.7 W (8.7 W for $COCl_2$) at input voltage ≤ 26 VDC
Operating temperature:	-30°C to +60°C
Storage temperature:	-30°C to +60°C
Pressure:	700 to 1300 hPa
Humidity:	0% to 99% r. H. (non condensing)
Application:	II 2G
Explosion protection:	Ex d ib IIC T4 Gb (at U_m = 30 VDC for all connections)
EC type examination certificate:	BVS 16 ATEX E 065 X (X: the measuring function according Annex II, point 1.5.5 of directive 2014/34/EU is not part of the EC type examination certificate.)
Protection class EN60529:	IP 66 (gas intake IP54)
Display:	2 x 16 signs, illuminated
Housing:	Cast aluminum epoxide varnish / stainless steel
Connections:	10-core cable tail (1 m) or 7-pin eXLink plug
Open-Drain-outputs:	2 x alarm, 1 x system failure, 1 x maintenance request Characteristic values max. 30 VDC / 2.5 A
SF-Open-Drain- output:	In normal operation active (conductive)
Analog output:	0 mA in case of system failure 2 or 4 mA in the service mode, programmable 4 - 20 mA in the measuring mode 22 mA when full scale is exceeded max. burdon: 450 Ohm
EMC:	EN 61000-6-4:2007 + A1:2011 / EN 50270:2015 (type 2)
Functional safety:	SIL 2 compliant according to IEC 61508:2010
Automatic self-test:	every 24 hours, time is selectable
Weight:	ca. 4800 g
Dimensions:	121 x 294 x 138 mm (W x H x D)

11 Sensor-specific data

11.1 Statox 560 Sensor Module $COCl_2$ 0.5 ppm 562920

Sensor type	Electrochemical 3-electrode sensor
Measuring range / resolution	0.00 to 0.50 ppm $COCl_2$
Detection limit [1]	0.02 ppm
Temperature range	−20 to +50 °C, short term -30 to +60 °C
Pressure range	700 – 1100 hPa
Humidity range	10-99% r.H. (non-condensing)
Response time t_{90} at 0.3 ppm [1] [2]	< 200 s
Response time t_{20} at 0.3 ppm [1] [2]	< 20 s
Warm-up time: ready for operation in [1]	< 15 min
ready to calibrate after	< 60 min
Accuracy [1]	< ± 10% of measured value or ± 0.01 ppm (higher value applicable)
Long-term zero drift	< ± 0.01 ppm / month
Zero drift (-20 to +50 °C)	< ± 0.02 ppm
Zero point change by abrupt change in humidity [1]	< ± 0.04 ppm (temporary)
Loss of sensitivity [1]	< 15 % in 12 months
Span gas	0.30 – 0.50 ppm $COCl_2$
Adjustment range of alarm thresholds	A1 = 0.10 - 0.49 ppm; A2>A1 Default values: A1 = 0.10 ppm; A2 = 0.20 ppm
Test gas for self-test	$COCl_2$, produced pyrolytic
Self-test thresholds	Start at c < 0.06 ppm / Test ok: signal ≥ 0.10 ppm within 60 s Test ok at T < 0°C: signal ≥ 0.05 ppm within 60 s
Temperature range for self-test	−10 to +50°C
Warranty sensor / generator cell	12 months / 12 months
Marking of the generator cell	II 2G Ex db ib IIC Gb / BVS 16 ATEX E 048U
Cross sensitivities [3]	**Gas / concentration / display of $COCl_2$** HCN / 0.6 ppm / 0.7 ppm H_2S / 0.1 ppm / 0.2 ppm NO_2 / 1.5 ppm / -0.07 ppm CO / 30 ppm / 0 ppm SO_2 / 2 ppm / 0.01 ppm H_2 / 100 ppm / 0 ppm NH_3 / 50 ppm / 0.06 ppm Cl_2 / 0.5 ppm / 0.3 ppm AsH_3 / 0.05 ppm / 0.06 ppm HCl / 0.6 ppm / 1 ppm CH_4 / 2.19 % / 0 ppm NO / 100 ppm / -0.1 ppm ClO_2 / 0.1 ppm / -0.06 ppm N_2H_4 / 0.05 ppm / 0 ppm

[1] The values are typical values, apply for new sensors and ambient conditions of 20°C, 50% r.H. and 1013 mbar.
[2] The response times were measured with the Statox 560 calibration adapter at 30 l/h.
[3] The above list may be incomplete. The listed values are average values, they might differ from sensor to sensor.
Do not use interference gas for calibration!

11.2 Statox 560 Sensor Module $COCl_2$ 1 ppm 562922

Sensor type	Electrochemical 3-electrode sensor
Measuring range / resolution	0.00 to 1.00 ppm $COCl_2$
Detection limit [1]	0.02 ppm
Temperature range	−20 to +50 °C, short term -30 to +60 °C
Pressure range	700 – 1100 hPa
Humidity range	10-99% r.H. (non-condensing)
Response time t_{90} at 0.3 ppm [1] [2]	< 200 s
Response time t_{20} at 0.3 ppm [1] [2]	< 20 s
Warm-up time: ready for operation in [1]	< 15 min
ready to calibrate after	< 60 min
Accuracy [1]	< ± 10% of measured value or ± 0.01 ppm (higher value applicable)
Long-term zero drift	< ± 0.01 ppm / month
Zero drift (-20 to +50 °C)	< ± 0.02 ppm
Zero point change by abrupt change in humidity [1]	< ± 0.04 ppm (temporary)
Loss of sensitivity [1]	< 15 % in 12 months
Span gas	0.30 – 0.60 ppm $COCl_2$
Adjustment range of alarm thresholds	A1 = 0.10 - 0.99 ppm; A2>A1 Default values: A1 = 0.10 ppm; A2 = 0.20 ppm
Test gas for self-test	$COCl_2$, produced pyrolytic
Self-test thresholds	Start at c < 0.06 ppm / Test ok: signal ≥ 0.10 ppm within 60 s Test ok at T < 0°C: signal ≥ 0.05 ppm within 60 s
Temperature range for self-test	−10 to +50°C
Warranty sensor / generator cell	12 months / 12 months
Marking of the generator cell	II 2G Ex db ib IIC Gb / BVS 16 ATEX E 048U
Cross sensitivities [3]	**Gas / concentration / display of $COCl_2$**
	HCN / 0.6 ppm / 0.7 ppm
	H_2S / 0.1 ppm / 0.2 ppm
	NO_2 / 1.5 ppm / -0.07 ppm
	CO / 30 ppm / 0 ppm
	SO_2 / 2 ppm / 0.01 ppm
	H_2 / 100 ppm / 0 ppm
	NH_3 / 50 ppm / 0.06 ppm
	Cl_2 / 0.5 ppm / 0.3 ppm
	AsH_3 / 0.05 ppm / 0.06 ppm
	HCl / 0.6 ppm / 1 ppm
	CH_4 / 2.19 % / 0 ppm
	NO / 100 ppm / -0.1 ppm
	ClO_2 / 0.1 ppm / -0.06 ppm
	N_2H_4 / 0.05 ppm / 0 ppm

[1] The values are typical values, apply for new sensors and ambient conditions of 20°C, 50% r.H. and 1013 mbar.

[2] The response times were measured with the Statox 560 calibration adapter at 30 l/h.

[3] The above list may be incomplete. The listed values are average values, they might differ from sensor to sensor. Do not use interference gas for calibration!

11.3 Statox 560 Sensor Module $COCl_2$ 50 ppm 562924

Sensor type	Electrochemical 3-electrode sensor
Measuring range / resolution	0 to 50 ppm $COCl_2$
Detection limit [1]	1 ppm
Temperature range	−20 to +50 °C, short term -30 to +60 °C
Pressure range	700 – 1100 hPa
Humidity range	10-99% r.H. (non-condensing)
Response time t_{90} at 10 ppm [1] [2]	< 100 s
Response time t_{20} at 10 ppm [1] [2]	< 15 s
Warm-up time: ready for operation in [1]	< 15 min
ready to calibrate after	< 60 min
Accuracy [1]	< ± 10 % of measured value or ± 1 ppm (higher value applicable)
Long-term zero drift	< ± 0.1 ppm / month
Zero drift (-20 to +50 °C)	< ± 1 ppm
Zero point change by abrupt change in humidity [1]	< ± 1 ppm (temporary)
Loss of sensitivity [1]	< 15 % in 12 months
Span gas	5 – 15 ppm $COCl_2$
Adjustment range of alarm thresholds	A1 = 5 - 49 ppm; A2>A1 Default values: A1 = 5 ppm; A2 = 10 ppm
Test gas for self-test	$COCl_2$, produced pyrolytic
Self-test thresholds	Start at c < 3 ppm / Test ok: signal ≥ 5 ppm within 30 s (30 – 40°C) signal ≥ 2 ppm within 30 s (10 – 30°C) signal ≥ 1 ppm within 30 s (0 – 10°C)
Temperature range for self-test	0 to +40°C
Warranty sensor / generator cell	12 months / 12 months
Marking of the generator cell	II 2G Ex db ib IIC Gb / BVS 16 ATEX E 048U
Cross sensitivities [3]	**<u>Gas / concentration / display of $COCl_2$</u>** HCN / 10 ppm / 14 ppm H_2S / 10 ppm / 20 ppm NO_2 / 5 ppm / - 1 ppm CO / 30 ppm / 0 ppm H_2 / 100 ppm / 0 ppm Cl_2 / 4 ppm / 1 ppm HCl / 5 ppm / 4 ppm CH_4 / 2 % Vol / 0 ppm

[1] The values are typical values, apply for new sensors and ambient conditions of 20°C, 50% r.H. and 1013 mbar.
[2] The response times were measured with the Statox 560 calibration adapter at 30 l/h.
[3] The above list may be incomplete. The listed values are average values, they might differ from sensor to sensor.
Do not use interference gas for calibration!

11.4 Statox 560 Sensor Module HCN 20 ppm 562930

Sensor type	Electrochemical 2-electrode sensor
Measuring range / resolution	0.0 to 20.0 ppm HCN
Detection limit [1]	0.2 ppm
Temperature range	−20 to +50 °C, short term -30 to +60 °C
Pressure range	700 – 1100 hPa
Humidity range	10-99% r.H. (non-condensing)
Response time t_{90} at 1.9 ppm [1] [2]	< 60 s
Response time t_{20} at 1.9 ppm [1] [2]	< 15 s
Warm-up time: ready for operation in [1]	< 2 min
ready to calibrate after	< 15 min
Accuracy [1]	< ± 10% of measured value or ± 0.2 ppm (higher value applicable)
Long-term zero drift	< ± 0.05 ppm / month
Zero drift (-20 to +50 °C)	< ± 0.2 ppm
Zero point change by abrupt change in humidity [1]	< ± 0.2 ppm (temporary)
Loss of sensitivity [1]	< 15 % in 6 months
Span gas [4]	1.9 - 10.0 ppm HCN
Adjustment range of alarm thresholds	A1 = 1.9 - 19.9 ppm; A2>A1 Default values: A1 = 1.9 ppm; A2 = 3.8 ppm
Test gas for self-test	HCN, produced electrochemically
Self-test thresholds	Start at c < 1.0 ppm / Test ok: signal ≥ 1.9 ppm within 60 s Test ok at T < 0°C: signal ≥ 1.0 ppm within 60 s
Temperature range for self-test	−10 to +60°C
Warranty sensor / generator cell	12 months / 12 months
Cross sensitivities [3]	**<u>Gas / concentration / display of HCN</u>** $COCl_2$ / 0.5 ppm / 0.6 ppm H_2S / 2 ppm / 5.9 ppm NO_2 / 5 ppm / -2.6 ppm CO / 30 ppm / 0 ppm SO_2 / 2 ppm / 0.01 ppm H_2 / 100 ppm / 0 ppm NH_3 / 150 ppm / 0.1 ppm Cl_2 / 2 ppm / 3.5 ppm AsH_3 / 0.1 ppm / 0.7 ppm HCl / 6.5 ppm / 5.6 ppm ClO_2 / 0.15 ppm / -0.1 ppm N_2H_4 / 0.08 ppm / -0.1 ppm

[1] The values are typical values, apply for new sensors and ambient conditions of 20°C, 50% r.H. and 1013 mbar.
[2] The response times were measured with the Statox 560 calibration adapter at 30 l/h.
[3] The above list may be incomplete. The listed values are average values, they might differ from sensor to sensor. Do not use interference gas for calibration!
[4] Calibration only from 0 to 50°C!

11.5 Statox 560 Sensor Module HCN 50 ppm 562932

Sensor type	Electrochemical 2-electrode sensor
Measuring range / resolution	0.0 to 50.0 ppm HCN
Detection limit [1)]	0.5 ppm
Temperature range	−20 to +50 °C, short term -30 to +60 °C
Pressure range	700 – 1100 hPa
Humidity range	10-99 % r.H. (non-condensing)
Response time t_{90} at 5 ppm [1) 2)]	< 60 s
Response time t_{20} at 5 ppm [1) 2)]	< 15 s
Warm-up time: ready for operation in [1)]	< 2 min
ready to calibrate after	< 15 min
Accuracy [1)]	< ± 10% of measured value or ± 0.5 ppm (higher value applicable)
Long-term zero drift	< ± 0.2 ppm / month
Zero drift (-20 to +50 °C)	< ± 0.5 ppm
Zero point change by abrupt change in humidity [1)]	< ± 1 ppm (temporary)
Loss of sensitivity [1)]	< 15 % in 6 months
Span gas [4)]	4.5 – 50.0 ppm HCN
Adjustment range of alarm thresholds	A1 = 4.9 – 49.9 ppm; A2>A1
	Default values: A1 = 4.9 ppm; A2 = 9.8 ppm
Test gas for self-test	HCN, produced electrochemically
Self-test thresholds	Start at c < 3.0 ppm / Test ok: signal ≥ 4.9 ppm within 100 s
	Test ok at T < 0°C: signal ≥ 2.5 ppm within 100 s
Temperature range for self-test	−10 to +60°C
Warranty sensor / generator cell	12 months / 12 months
Cross sensitivities [3)]	**<u>Gas / concentration / display of HCN</u>**
	$COCl_2$ / 10 ppm / 15 ppm
	H_2S / 5 ppm / 17 ppm
	NO_2 / 5 ppm / -6 ppm
	CO / 30 ppm / 0 ppm
	SO_2 / 2 ppm / < 1 ppm
	H_2 / 100 ppm / 0 ppm
	NH_3 / 150 ppm / < 1 ppm
	Cl_2 / 2 ppm / 2 ppm
	AsH_3 / 0.2 ppm / 1 ppm
	HCl / 30 ppm / 46 ppm
	ClO_2 / 0.15 ppm / < -1 ppm
	N_2H_4 / 0.08 ppm / < -1 ppm

[1)] The values are typical values, apply for new sensors and ambient conditions of 20°C, 50% r.H. and 1013 mbar.
[2)] The response times were measured with the Statox 560 calibration adapter at 30 l/h.
[3)] The above list may be incomplete. The listed values are average values, they might differ from sensor to sensor.
Do not use interference gas for calibration!
[4)] Calibration only from 0 to 50°C!

11.6 Statox 560 Sensor Module HCN 100 ppm 562934

Sensor type	Electrochemical 2-electrode sensor
Measuring range / resolution	0 to 100 ppm HCN
Detection limit [1]	1 ppm
Temperature range	−20 to +50 °C, short term -30 to +60 °C
Pressure range	700 – 1100 hPa
Humidity range	10-99% r.H. (non-condensing)
Response time t_{90} at 10 ppm [1] [2]	< 60 s
Response time t_{20} at 10 ppm [1] [2]	< 15 s
Warm-up time: ready for operation in [1]	< 2 min
ready to calibrate after	< 15 min
Accuracy [1]	< ± 10% of measured value or ± 1 ppm (higher value applicable)
Long-term zero drift	< ± 0.2 ppm / month
Zero drift (-20 to +50 °C)	< ± 1 ppm
Zero point change by abrupt change in humidity [1]	< ± 1 ppm (temporary)
Loss of sensitivity [1]	< 15 % in 6 months
Span gas [4]	10 - 90 ppm HCN
Adjustment range of alarm thresholds	A1 = 10 - 99 ppm; A2>A1
	Default values: A1 = 10 ppm; A2 = 20 ppm
Test gas for self-test	HCN, produced electrochemically
Self-test thresholds	Start at c < 5 ppm / Test ok: signal ≥ 10 ppm within 100 s
	Test ok at T < 0°C: signal ≥ 5 ppm within 100 s
Temperature range for self-test	−10 to +60°C
Warranty sensor / generator cell	12 months / 12 months
Cross sensitivities [3]	**Gas / concentration / display of HCN**
	$COCl_2$ / 10 ppm / 15 ppm
	H_2S / 5 ppm / 17 ppm
	NO_2 / 5 ppm / -6 ppm
	CO / 30 ppm / 0 ppm
	SO_2 / 2 ppm / < 1 ppm
	H_2 / 100 ppm / 0 ppm
	NH_3 / 150 ppm / < 1 ppm
	Cl_2 / 2 ppm / 2 ppm
	AsH_3 / 0.2 ppm / 1 ppm
	HCl / 30 ppm / 46 ppm
	ClO_2 / 0.15 ppm / < -1 ppm
	N_2H_4 / 0.08 ppm / < -1 ppm

[1] The values are typical values, apply for new sensors and ambient conditions of 20°C, 50% r.H. and 1013 mbar.
[2] The response times were measured with the Statox 560 calibration adapter at 30 l/h.
[3] The above list may be incomplete. The listed values are average values, they might differ from sensor to sensor. Do not use interference gas for calibration!
[4] Calibration only from 0 to 50°C!

11.7 Statox 560 Sensor Module Cl_2 5 ppm 562910

Sensor type	Electrochemical 2-electrode sensor
Measuring range / resolution	0.00 to 5.00 ppm Cl_2
Detection limit [1)]	0.03 ppm
Temperature range	−20 to +50 °C, short term -30 to +60 °C
Pressure range	700 – 1100 hPa
Humidity range	10-99 % r.H. (non-condensing)
Response time t_{90} at 2 ppm [1) 2)]	< 200 s
Response time t_{20} at 2 ppm [1) 2)]	< 15 s
Warm-up time: ready for operation in [1)]	< 2 min
ready to calibrate after	< 15 min
Accuracy [1)]	< ± 10% of measured value or ± 0.05 ppm (higher value applicable)
Long-term zero drift	< ± 0.01 ppm / month
Zero drift (-20 to +50 °C)	< ± 0.1 ppm
Zero point change by abrupt change in humidity [1)]	< ± 0.2 ppm (temporary)
Loss of sensitivity [1)]	< 15 % in 6 months
Span gas	2.00 - 5.00 ppm Cl_2
Adjustment range of alarm thresholds	A1 = 0.50 - 4.99 ppm; A2>A1
	Default values: A1=0.50 ppm; A2 = 1.00 ppm
Test gas for self-test	Cl_2, produced electrochemically
Self-test thresholds	Start at c < 0.25 ppm / Test ok: signal ≥ 0.50 ppm within 60 s
Temperature range for self-test	−20 to +60°C
Warranty sensor / generator cell	12 months / 12 months
Cross sensitivities [3)]	**Gas / concentration / display of Cl_2**
	HCN / 10 ppm / 0 ppm
	H_2S / 5 ppm / -0.02 ppm
	NO_2 / 2 ppm / 0.01 ppm
	CO / 600 ppm / 0.01 ppm
	SO_2 / 2 ppm / 0.4 ppm
	H_2 / 2 % / 0 ppm
	NH_3 / 50 ppm / 0 ppm
	$COCl_2$ / 0.5 ppm / 0 ppm
	HCl / 10 ppm / 0.01 ppm
	CH_4 / 2 % / 0 ppm

[1)] The values are typical values, apply for new sensors and ambient conditions of 20°C, 50% r.H. and 1013 mbar.
[2)] The response times were measured with the Statox 560 calibration adapter at 30 l/h.
[3)] The above list may be incomplete. The listed values are average values, they might differ from sensor to sensor.
Do not use interference gas for calibration!

11.8 Statox 560 Sensor Module Cl_2 10 ppm 562912

Sensor type	Electrochemical 2-electrode sensor
Measuring range / resolution	0.0 to 10.0 ppm Cl_2
Detection limit [1]	0.2 ppm
Temperature range	−20 to +50 °C, short term -30 to +60 °C
Pressure range	700 – 1100 hPa
Humidity range	10-99 % r.H. (non-condensing)
Response time t_{90} at 2 ppm [1] [2]	< 200 s
Response time t_{20} at 2 ppm [1] [2]	< 15 s
Warm-up time: ready for operation in [1]	< 2 min
ready to calibrate after	< 15 min
Accuracy [1]	< ± 10% of measured value or ± 0.1 ppm (higher value applicable)
Long-term zero drift	< ± 0.01 ppm / month
Zero drift (-20 to +50 °C)	< ± 0.3 ppm
Zero point change by abrupt change in humidity [1]	< ± 0.2 ppm (temporary)
Loss of sensitivity [1]	< 15 % in 6 months
Span gas	4.0 - 6.0 ppm Cl_2
Adjustment range of alarm thresholds	A1 = 1.0 - 9.9 ppm; A2>A1
	Default values: A1= 1.0 ppm; A2 = 2.0 ppm
Test gas for self-test	Cl_2, produced electrochemically
Self-test thresholds	Start at c < 0.5 ppm / Test ok: signal ≥ 1.0 ppm within 60 s
Temperature range for self-test	−20 to +60°C
Warranty sensor / generator cell	12 months / 12 months
Cross sensitivities [3]	**<u>Gas / concentration / display of Cl_2</u>**
	HCN / 10 ppm / 0 ppm
	H_2S / 5 ppm / < -0.1 ppm
	NO_2 / 2 ppm / < 0.1 ppm
	CO / 600 ppm / < 0.1 ppm
	SO_2 / 2 ppm / 0.4 ppm
	H_2 / 2 % / 0 ppm
	NH_3 / 50 ppm / 0 ppm
	$COCl_2$ / 0.5 ppm / 0 ppm
	HCl / 10 ppm / < 0.1 ppm
	CH_4 / 2 % / 0 ppm

[1] The values are typical values, apply for new sensors and ambient conditions of 20°C, 50% r.H. and 1013 mbar.
[2] The response times were measured with the Statox 560 calibration adapter at 30 l/h.
[3] The above list may be incomplete. The listed values are average values, they might differ from sensor to sensor.
Do not use interference gas for calibration!

11.9 Statox 560 Sensor Module H_2S 100 ppm 562928

Sensor type	Electrochemical 2-electrode sensor
Measuring range / resolution	0 to 100 ppm H_2S
Detection limit [1]	1 ppm
Temperature range	−20 to +50 °C, short term -30 to +60 °C
Pressure range	700 – 1100 hPa
Humidity range	10-99% r.H. (non-condensing)
Response time t_{90} at 10 ppm [1] [2]	< 60 s
Response time t_{20} at 10 ppm [1] [2]	< 10 s
Warm-up time: ready for operation in [1]	< 2 min
ready to calibrate after	< 15 min
Accuracy [1]	< ± 10% of measured value or ± 1 ppm (higher value applicable)
Long-term zero drift	< ± 0.2 ppm / month
Zero drift (-20 to +50 °C)	< ± 1 ppm
Zero point change by abrupt change in humidity [1]	< ± 1 ppm (temporary)
Loss of sensitivity [1]	< 15 % in 6 months
Span gas	10 - 100 ppm H_2S
Adjustment range of alarm thresholds	A1 = 10 - 99 ppm; A2>A1 Default values: A1 = 10 ppm; A2 = 20 ppm
Test gas for self-test	H_2S, produced electrochemically
Self-test thresholds	Start at c < 5 ppm / Test ok: signal ≥ 10 ppm within 40 s
Temperature range for self-test	−20 to +60°C
Warranty sensor / generator cell	12 months / 12 months
Cross sensitivities [3]	**Gas / concentration / display of H_2S**
	$COCl_2$ / 3 ppm / 1 ppm
	HCN / 10 ppm / 2 ppm
	NO_2 / 5 ppm / -2 ppm
	CO / 50 ppm / 0 ppm
	SO_2 / 10 ppm / 0 ppm
	H_2 / 100 ppm / 0 ppm
	NH_3 / 50 ppm / 0 ppm
	Cl_2 / 4 ppm / 1 ppm
	HCl / 5 ppm / 1 ppm

[1] The values are typical values, apply for new sensors and ambient conditions of 20°C, 50% r.H. and 1013 mbar.
[2] The response times were measured with the Statox 560 calibration adapter at 30 l/h.
[3] The above list may be incomplete. The listed values are average values, they might differ from sensor to sensor.
Do not use interference gas for calibration!

11.10 Statox 560 Sensor Module CO 300 ppm 562916

Sensor type	Electrochemical 3-electrode sensor
Measuring range / resolution	0 to 300 ppm CO
Detection limit [1]	2 ppm
Temperature range	−20 to +40 °C, short term -30 to +50 °C
Pressure range	700 – 1100 hPa
Humidity range	10-99% r.H. (non-condensing)
Response time t_{90} at 30 ppm [1] [2]	< 120 s
Response time t_{20} at 30 ppm [1] [2]	< 15 s
Warm-up time: ready for operation in [1]	< 15 min
ready to calibrate after	< 60 min
Accuracy [1]	< ± 10% of measured value or ± 3 ppm (higher value applicable)
Long-term zero drift	< ± 3 ppm / month
Zero drift (-20 to +40 °C)	< ± 5 ppm
Zero point change by abrupt change in humidity [1]	< ± 3 ppm (temporary)
Loss of sensitivity [1]	< 15 % in 6 months
Span gas	30 - 200 ppm CO
Adjustment range of alarm thresholds	A1 = 30 - 299 ppm; A2>A1
	Default values: A1 = 30 ppm; A2 = 60 ppm
Test gas for self-test	H_2, produced electrochemically
Self-test thresholds	Start at c < 20 ppm / Test ok: signal ≥ 30 ppm within 100 s
Temperature range for self-test	−10 to +40°C
Warranty sensor / generator cell	12 months / 12 months
Cross sensitivities [3] [4]	**<u>Gas / concentration / display of CO</u>**
	$COCl_2$ / 3 ppm / 0 ppm
	HCN / 10 ppm / 7 ppm
	NO_2 / 5 ppm / -3 ppm
	H_2S / 10 ppm / 0 ppm
	Ethylene / 100 ppm / 81 ppm
	H_2 / 100 ppm / 7 ppm
	SO_2 / 2 ppm / 1 ppm
	NH_3 / 50 ppm / 1 ppm
	Cl_2 / 5 ppm / 0 ppm
	HCl / 5 ppm / 8 ppm
	CH_4 / 2.5 %Vol / 0 ppm

[1] The values are typical values, apply for new sensors and ambient conditions of 20°C, 50% r.H. and 1013 mbar.

[2] The response times were measured with the Statox 560 calibration adapter at 30 l/h.

[3] The above list may be incomplete. The listed values are average values, they might differ from sensor to sensor. Do not use interference gas for calibration!

[4] Equipped as standard with cross sensitivity filter against H_2S, integrated in the dust and splash guard filter, capacity > 500 ppmh H_2S.

11.11 Statox 560 Sensor Module HCl 100 ppm 562936

Sensor type	Electrochemical 3-electrode sensor
Measuring range / resolution	0 to 100 ppm HCl
Detection limit [1)]	1 ppm
Temperature range	−20 to +50 °C, short term -30 to +60 °C
Pressure range	700 – 1100 hPa
Humidity range	10-99% r.H. (non-condensing)
Response time t_{90} at 30 ppm [1) 2) 4)]	< 300 s
Response time t_{20} at 30 ppm [1) 2) 4)]	< 60 s
Warm-up time: ready for operation in [1)]	< 15 min
ready to calibrate after	< 60 min
Accuracy [1)]	< ± 10% of measured value or ± 1 ppm (higher value applicable)
Long-term zero drift	< ± 0.3 ppm / month
Zero drift (-20 to +40 °C)	< ± 2 ppm
Zero point change by abrupt change in humidity [1)]	< ± 1 ppm (temporary)
Loss of sensitivity [1)]	< 15 % in 6 months
Span gas	40 - 60 ppm HCl
Adjustment range of alarm thresholds	A1 = 5 - 99 ppm; A2>A1
	Default values: A1 = 5 ppm; A2 = 10 ppm
Test gas for self-test	H_2S, produced electrochemically
Self-test thresholds	Start at c < 3 ppm / Test ok: signal ≥ 5 ppm within 40 s
Temperature range for self-test	−10 to +40°C
Warranty sensor / generator cell	6 months / 12 months
Cross sensitivities [3)]	**<u>Gas / concentration / display of HCl</u>**
	$COCl_2$ / 3 ppm / < 1 ppm
	HCN / 10 ppm / < 1 ppm
	NO_2 / 5 ppm / < -1 ppm
	NO / 50 ppm / 16 ppm
	H_2S / 10 ppm / 10 ppm
	CO / 50 ppm / 0 ppm
	SO_2 / 100 ppm / < 1 ppm
	H_2 / 100 ppm / 0 ppm
	NH_3 / 50 ppm / 0 ppm
	Cl_2 / 5 ppm / < 1 ppm
	N_2H_4 / 10 ppm / 0 ppm
	CH_3OH / 50 ppm / 0 ppm

[1)] The values are typical values, apply for new sensors and ambient conditions of 20°C, 50% r.H. and 1013 mbar.
[2)] The response times were measured with the Statox 560 calibration adapter at 30 l/h.
[3)] The above list may be incomplete. The listed values are average values, they might differ from sensor to sensor. Do not use interference gas for calibration!
[4)] Absorption of HCl on the surface may initially cause extended response time.

11.12 Statox 560 Sensor Module NH_3 150 ppm 562938

Sensor type	Electrochemical 3-electrode sensor
Measuring range / resolution	0 to 150 ppm NH_3
Detection limit [1]	2 ppm
Temperature range	−30 to +50 °C, short term -30 to +60 °C
Pressure range	800 – 1100 hPa
Humidity range	15-90 % r.H. (non-condensing)
Response time t_{90} at 50 ppm [1) 2) 4)]	< 180 s
Response time t_{20} at 50 ppm [1) 2) 4)]	< 30 s
Warm-up time: ready for operation in [1]	< 15 min
ready to calibrate after	< 60 min
Accuracy [1]	< ± 10 % of measured value or ± 1 ppm (higher value applicable)
Long-term zero drift	< ± 0.3 ppm / month
Zero drift (-20 to +40 °C)	< ± 4 ppm
Zero point change by abrupt change in humidity [1]	< ± 2 ppm (temporary)
Loss of sensitivity [1]	< 15 % in 6 months
Span gas	50 - 70 ppm NH_3
Adjustment range of alarm thresholds	A1 = 20 - 149 ppm; A2>A1
	Default values: A1 = 20 ppm; A2 = 40 ppm
Test gas for self-test	H_2S, produced electrochemically
Self-test thresholds	Start at c ≤ 10 ppm / Test ok: signal ≥ 10 ppm within 90 s
	Test ok at T < 10°C: signal ≥ 5 ppm within 90 s
Temperature range for self-test	−5 to +40°C
Warranty sensor / generator cell	6 months / 12 months
Cross sensitivities [3]	**Gas / concentration / display of NH_3**
	$COCl_2$ / 3 ppm / 0 ppm
	HCN / 10 ppm / 0 ppm
	NO_2 / 5 ppm / -8 ppm
	NO / 50 ppm / 0 ppm
	H_2S / 25 ppm / 30 ppm
	CO / 500 ppm / 0 ppm
	SO_2 / 20 ppm / -6 ppm
	H_2 / 100 ppm / 0 ppm
	Cl_2 / 2 ppm / -2 ppm
	Ethanol / 100 ppm / 0 ppm
	CO_2 / 5000 ppm / 0 ppm

[1] The values are typical values, apply for new sensors and ambient conditions of 20°C, 50% r.H. and 1013 mbar.
[2] The response times were measured with the Statox 560 calibration adapter at 30 l/h.
[3] The above list may be incomplete. The listed values are average values, they might differ from sensor to sensor. Do not use interference gas for calibration!
[4] Absorption of NH_3 on the surface may initially cause extended response time.

12 Declaration of conformity

EU- KONFORMITÄTSERKLÄRUNG
EU-DECLARATION OF CONFORMITY
UE-DÉCLARATION DE CONFORMITÉ

COMPUR Monitors

Compur Monitors GmbH & Co.KG
Weißenseestraße 101
D 81539 München

erklärt in alleiniger Verantwortung, dass das Produkt
hereby declares in sole responsibility, that the product
déclare comme seul responsable, que le produit

Statox 560 Messkopf Typ 5377
Statox 560 Sensor Head type 5377
Statox 560 Tête de détection type 5377

den folgenden EU-Richtlinien und den entsprechenden harmonisierten Normen entspricht.
complies with the following EU directives and corresponding harmonized standards.
correspond aux directives européennes suivantes et à leurs normes harmonisées.

Richtlinie/Directive 2014/34/EU

EN 60079-0:2012 +A11:2013

EN 60079-1:2014

EN 60079-11:2012

Richtlinie/Directive 2014/30/EU

EN 61000-6-4:2007 +A1:2011

EN 50270:2015 (Typ 2 / type 2)

München, 20. 11. 2017
Munich, 2017-11-20

Dr. Hermann Schmidtpott, Geschäftsführer

COMPUR Monitors GmbH & Co.KG
Postfach 900147
D-81501 München
DIN EN ISO 9001:2008 zertifiziert

Tel. Nr. ++49 89 62038268
Internet http://www.compur.com
E-mail: compur@compur.de

Geschäftsführer:
Dipl.-Ing. Bernd Rist
Dr. Hermann Schmidtpott

Specifications are subject to change without notice, and are provided only for comparison of products. The conditions under which our products are used, are beyond our control. Therefore, the user must fully test our products and / or information to determine suitability for any intended use, application, condition or situation. All information is given without warranty or guarantee. Compur Monitors disclaims any liability, negligence or otherwise, incurred in connection with the use of the products and information. Any statement or recommendation not contained herein is unauthorized and shall not bind Compur Monitors. Nothing herein shall be construed as a recommendation to use any product in conflict with patents covering any material or device or its use. No licence is implied or in fact granted under the claims of any patent. Instruments are manufactured by Compur Monitors GmbH & Co. KG, Munich.

The General Conditions of Supply and Service of Compur Monitors GmbH & Co. KG, Munich, are applicable.

Compur Monitors GmbH & Co. KG
Weißenseestraße 101
D-81539 München
Tel. 0049 (0) 89 62038 268
Fax 0049 (0) 89 62038 184
Internet: www.compur.com
E-Mail: compur@compur.de

5377 000 998 07 06 562991